Standard Details

SD0001 - New 1" Copper Service
SD0001R - New Recycled 1" Copper Service
SD0002 - Offset
SD0003 - Hydrant
SD0004 - Service Pole
SD0005 - 4" Service Manifold
SD0006 - New or Renewed 1-1/2" and 2" Copper Service WSP or PVC Main
SD0006R - New or Renewed 1-1/2" and 2" Copper Service WSP or PVC Main
SD0007 - 2" Blowoff
SD0007R - 2" Blowoff for Recycled Water
SD0008 - Pipeline Tracer Wire Installation
SD0009 - Test Station with Magnesium Anode
SD0010 - Test Station
SD0011 - Meter Insulation 1-1/2" & 2"
SD0012 - Pipeline Insulation and Bonding Jumper Details
SD0013 - Adjustable Pipe Support
SD0014 - Joint Harness
SD0015 - Survey Monument
SD0017 - Joint Blocking
SD0018 - Welded Outlet
SD0019 - Cased Crossing
SD0021 - Renewed 1" Copper Service
SD0022 - Transferring a 1" thru 2" “Long” Copper Service
SD0023 - Transferring a 1" “Short” Copper Service
SD0024 - Fireline Connection-DELETED
SD0025 - Mortar Lined & Tape Coated 4” to 36” Steel Pipe
SD0026 - Continuity Jumper Wire
SD0027 - ¾” & 1” Meter Insulation Detail
SD0028 - Wood Bulkhead Wall
SD0029 - Fireline, New and Renew
SD0030 - Level Transmitter Enclosure Mounting Plate Cover
SD0031 - Level Transmitter Enclosure
SD0032 - Level Transmitter Assembly Piping
SD0033 - Thermowell Assembly
SD0034 - Level Transmitter Assembly
SD0035 - Typical Conduit Stub Up
SD0036 - Steel Butt Strap
SD0037 - 2" Domestic Meter w/ Copper Pipe
SD0038 - Fireline, Insulation Retrofit
SD0039 - Erosion Control Board
SD0040 - Impressed Current Horizontal Ground Bed
SD0041 - Deep Well Ground Bed
SD0042 - Typical Air/Vacuum Release Valve
SD0044 - Typical Air/Vacuum Release Valve
SD0045 - Wharf Hydrant Drain

SD0046 - Shallow Well Ground Bed
SD0047 - Alternate Conduit Stub
SD0048 - Air / Vacuum Release Valve Assembly
SD0049 - 3" Turbo Meter
SD0050 - 3" Compound Meter with By-Pass
SD0051 - Bullhead
SD0052 - 24" Manhole / Drain
SD0053 - 24" Drain
SD0054 - 2" Bullhead
SD0055 - 4" Compound Meter w/ Bypass
SD0056 - 6" Fireline Water Meter
SD0057 - Emergency Pumping Connection w/ Curb & Gutter
SD0058 - Hydrant Off Improved Area
SD0059 - Emergency Pumping Connection w/out Curb & Gutter
SD0060 - Joint Restraint Assembly
SD0061 - Concrete Anchor Blocks 6" & 8" Connection
SD0062 - Concrete Anchor Blocks 12" & 14" Connection
SD0063 - Bollard
SD0064 - Rectifier Anode Junction Box Installation
SD0066 - Fire Flow Project Sign (8'x4')
SD0067 - 4" Tide Flex Check Valve
SD0068 - Project Sign (4' x 2' No Board Member Names)
SD0069 - Temporary Diversion / Sediment Dams & Culverts
SD0070 - Temperature Transmitter
SD0071 - Air Relief Valve
SD0072 - Pressure Relief Valve
SD0073 - Water Sampling Station
SD0074 - Insulating Details (DELETED)
SD0075 - Pressure Transmitter Assembly
SD0076 - Pressure Transmitter
SD0077 - Concrete Blocking (DELETED)
SD0078 - 2" Irrigation Meter
SD0079 - Fireline Transfer Connection (DELETED)
SD0080 - Insulating Details w/ Harness
SD0081 - Typical Anode Trench & Type Splice Box Detail
SD0082 - Rectifier Installation
SD0083 - Fireflow Project Sign Detail (4'-2" x 2'-8")
SD0084 - ID Tag Detail
SD0085 - Project Sign Detail (4'-2" x 2'-8")
SD0087 - Rehab Project Sign (4'-2" x 2'-8")
SD0088 - Meter Box with Magnesium Anode
SD0089 - Retrofit WSP Fireline Connection to Above Ground Backflow
SD0090 - Fireline, Inspection and Insulation Retrofit
SD0091 - 4" Turbine Meter
SD0092 - Backflow Assembly Standard Installation Diagram
SD0093 - Fireline, Inspection and Insulation Retrofit
SD0094 - 2" Fireline Connection
SD0095 - Aluminum Tubing Valve Cap Rise
SD0096 - Pothole Details of Anode Installation

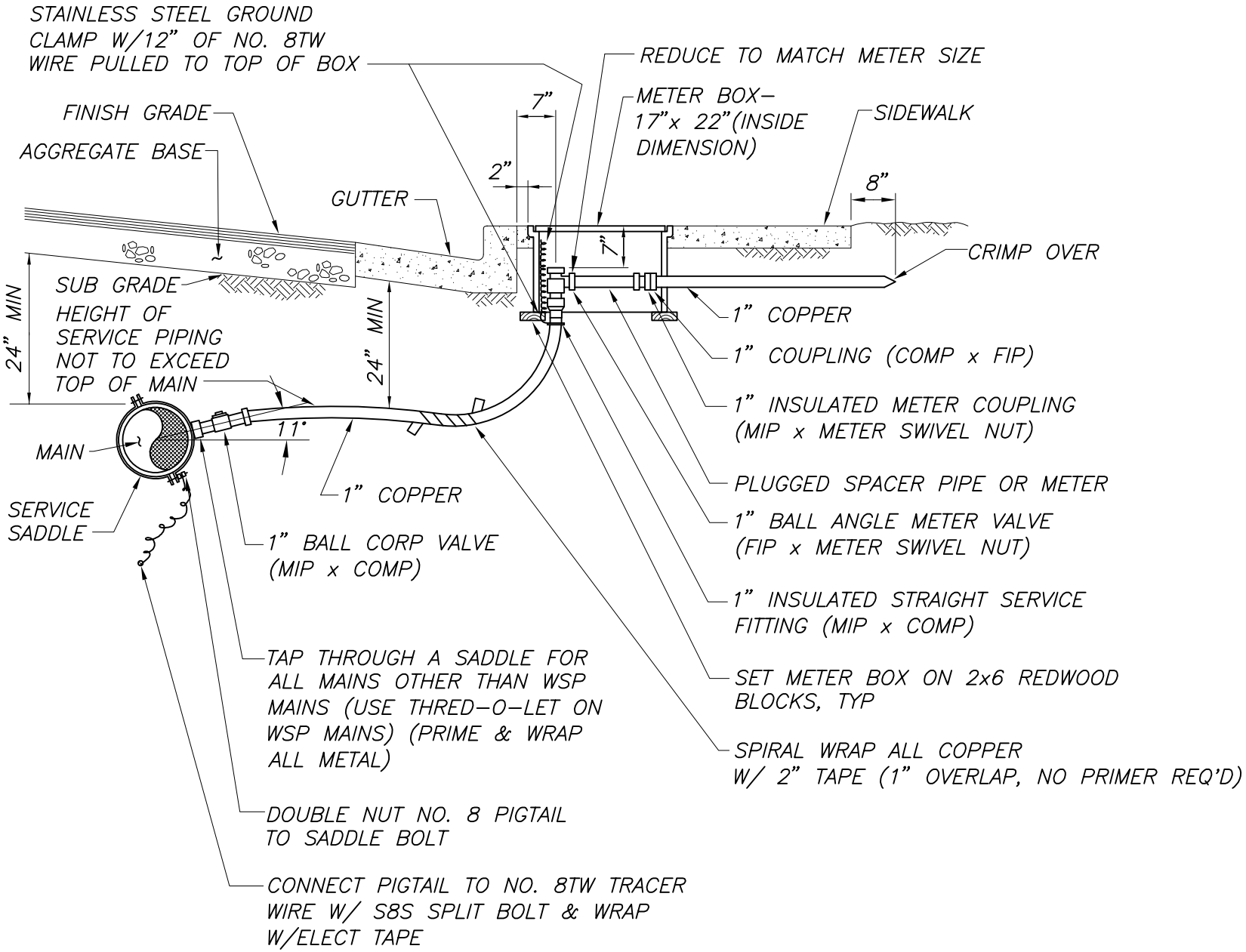

NEW 1"COPPER SERVICE

NO SCALE	FILE NO. SD0001	APPROV. BY: EI	REV. DATE: JUL '19

Back to page 1

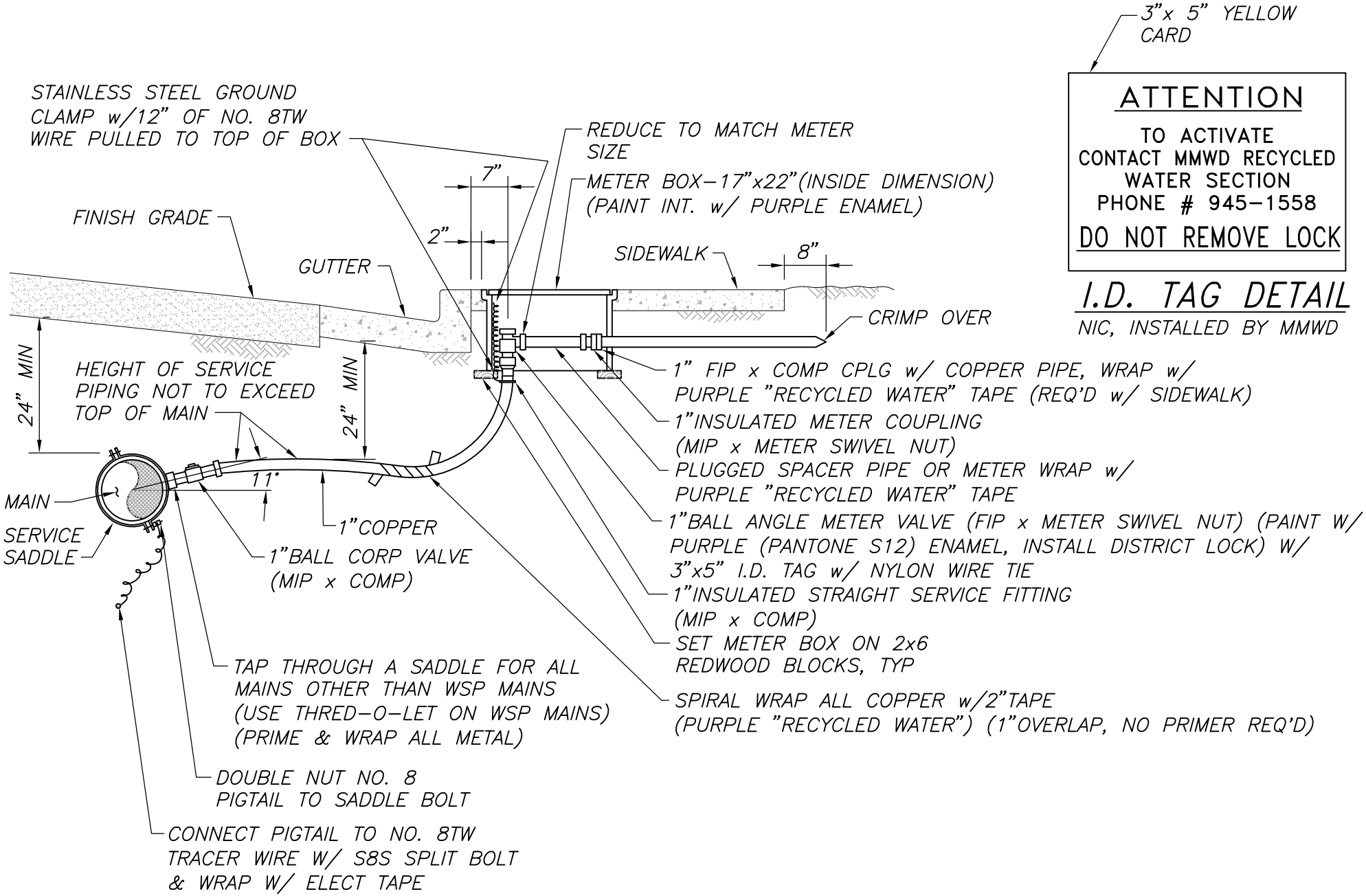

NEW RECYCLED 1" COPPER SERVICE

NO SCALE	FILE NO. SD0001R	APPROV. BY: EI	REV. DATE: JUL '19

Back to page 1

NOTES:

1. AN OFFSET IS REQUIRED WHEN CROSSING A UTILITY WILL RESULT IN THE WATER LINE HAVING A COVER GREATER THAN 5'–0".

2. PRIME AND WRAP ALL BARE METAL.

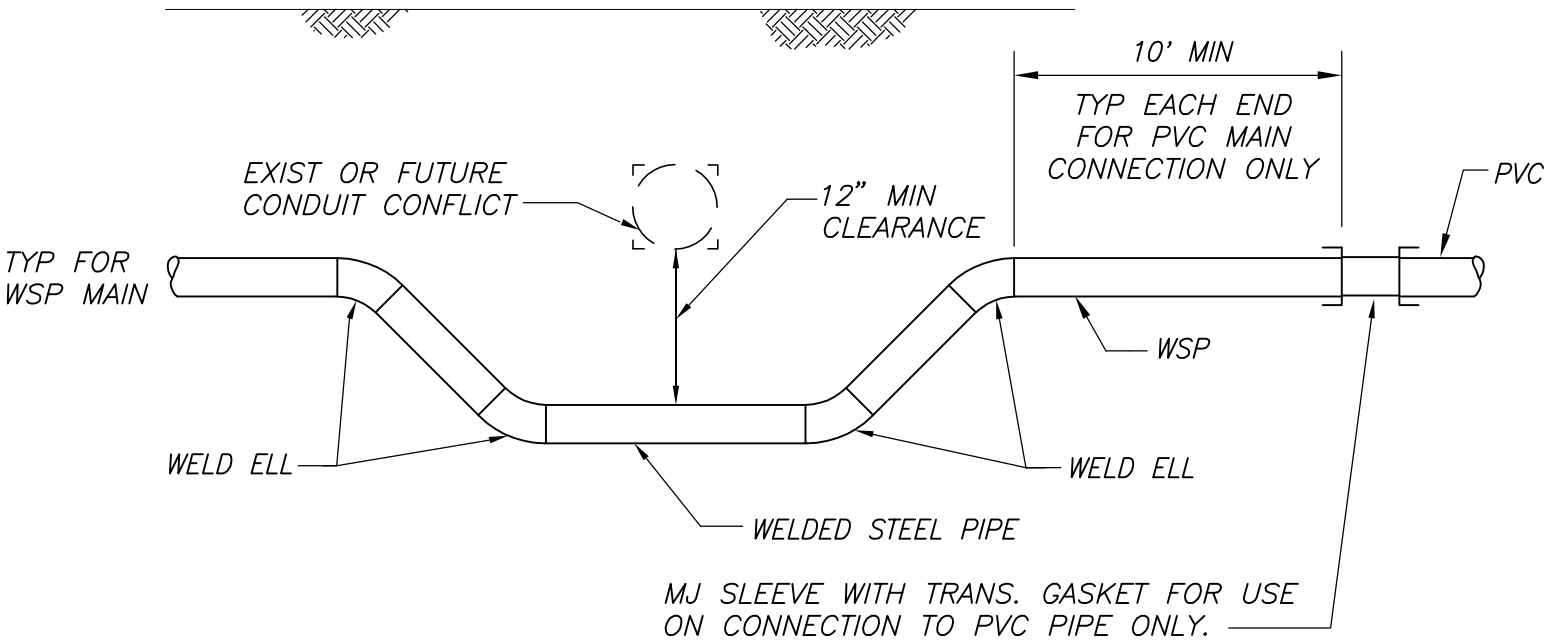

OFFSET

NO SCALE	FILE NO. SD0002	APPROV. BY: JM	REV. DATE: MAY '08

Back to page 1

NOTES:

1. HYDRANT LOCATION IN RELATION TO THE CURB AND SIDEWALK MUST BE DETERMINED BY THE CONTROLLING FIRE MARSHAL.
2. PRIME AND WRAP HYDRANT BURY, RISER(S), FLANGES & ALL BARE METAL UP TO BOTTOM OF HYDRANT FLANGE.

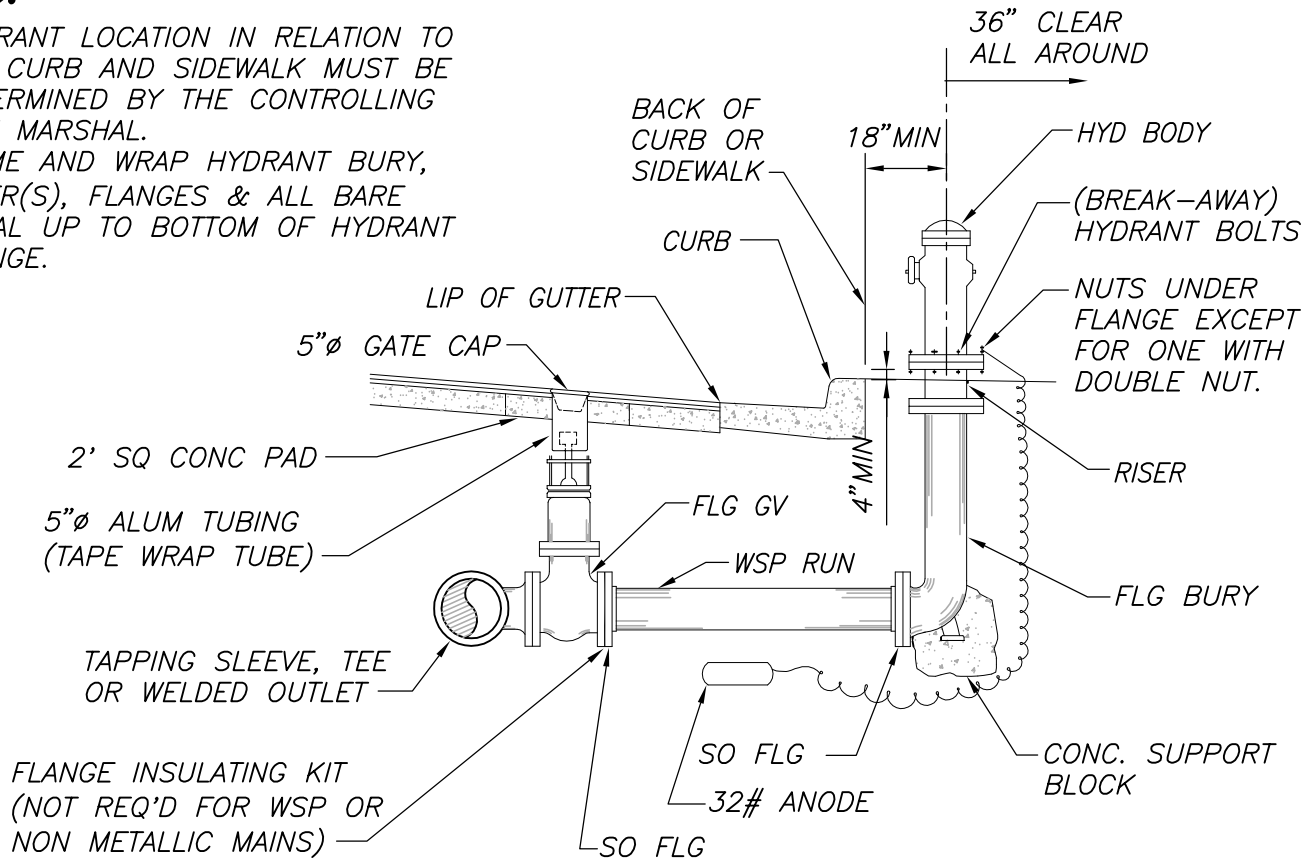

HYDRANT

NO SCALE	FILE NO. SD0003	APPROV. BY: KMcD	REV. DATE: 10-5-12

Back to page 1

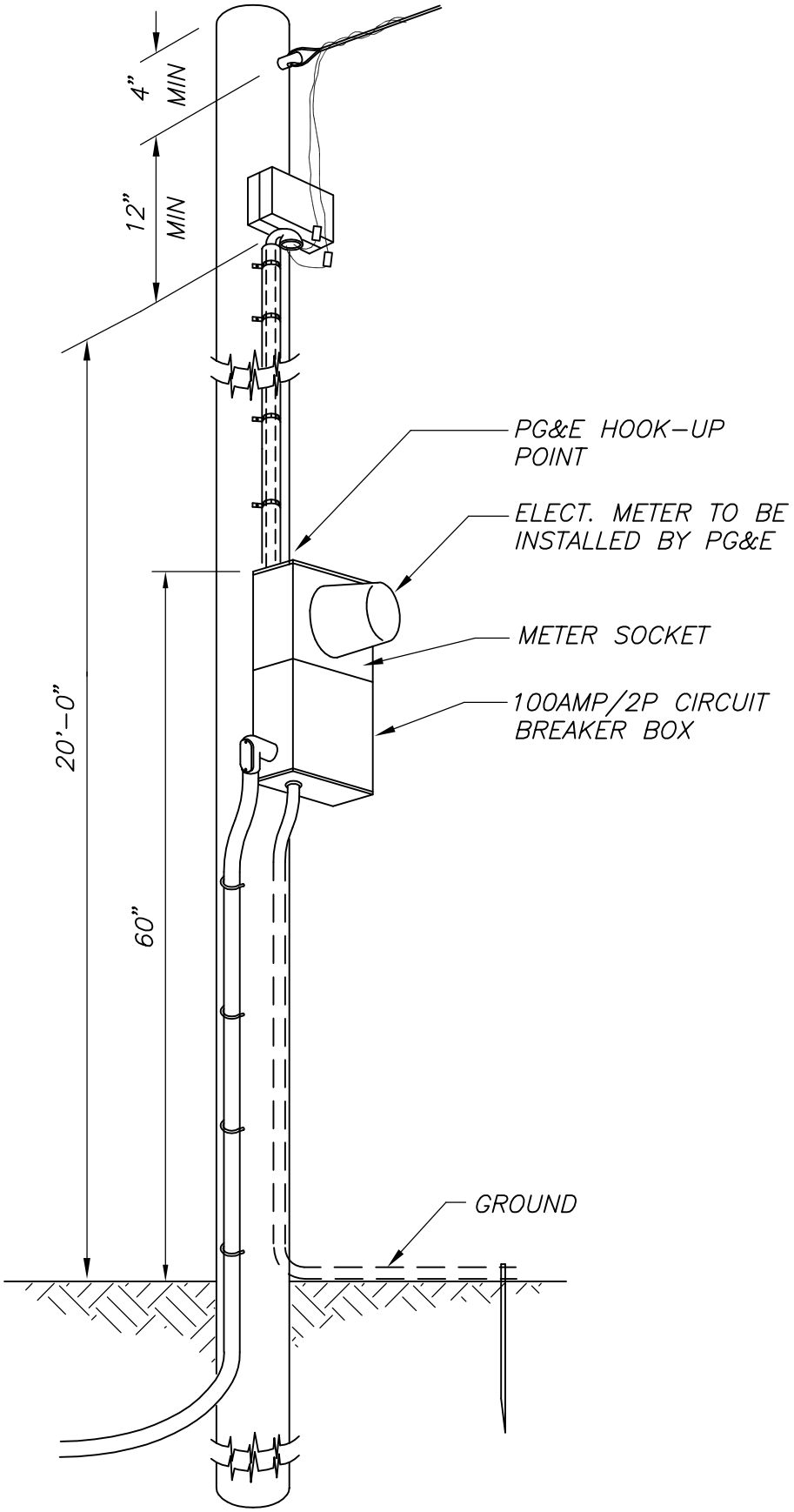

SERVICE POLE

SCALE: NTS	FILE NO. SD0004	APPROV. BY: RKT	REV. DATE: 5-12-95

Back to page 1

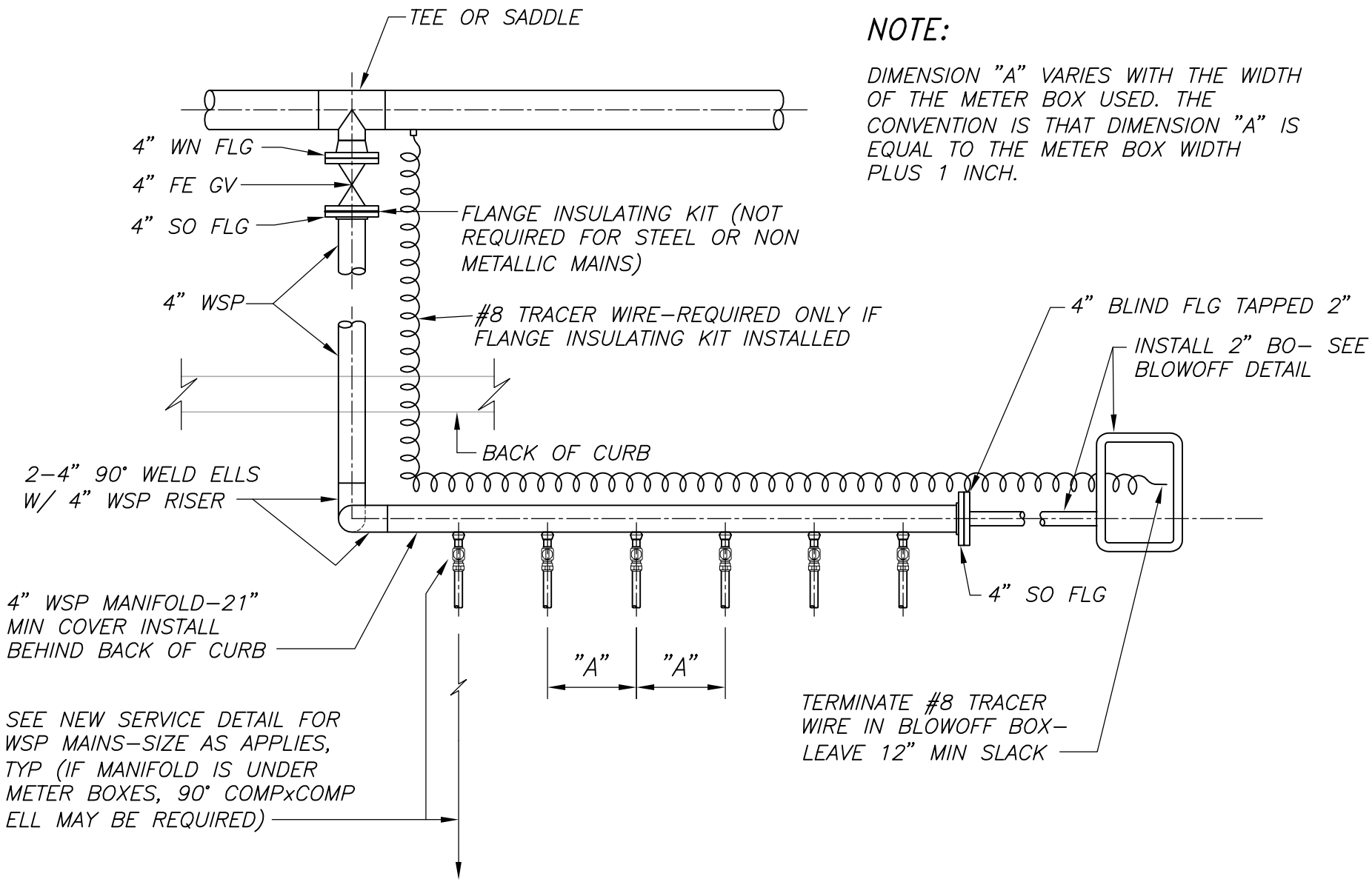

NOTE:

DIMENSION "A" VARIES WITH THE WIDTH OF THE METER BOX USED. THE CONVENTION IS THAT DIMENSION "A" IS EQUAL TO THE METER BOX WIDTH PLUS 1 INCH.

4" SERVICE MANIFOLD

NO SCALE	FILE NO. SD0005	APPROV. BY: KMcD	REV. DATE: 2–22–05

Back to page 1

NOTES:

1. INSTALL METER BOX ON 2"x6"REDWOOD BLOCKING.
2. IF 2"POTABLE SERVICES REQUIRES A BYPASS. SEE 2" BY–PASS STANDARD DETAIL SD000037 DRAWING.
3. SEE ALSO METER INSULATION STANDARD DETAIL SD000011.
4. ALL OVAL METER BOXES OR DAMAGED METER BOXES SHALL BE REPLACED OR AS REQUIRED BY THE ENGINEER.

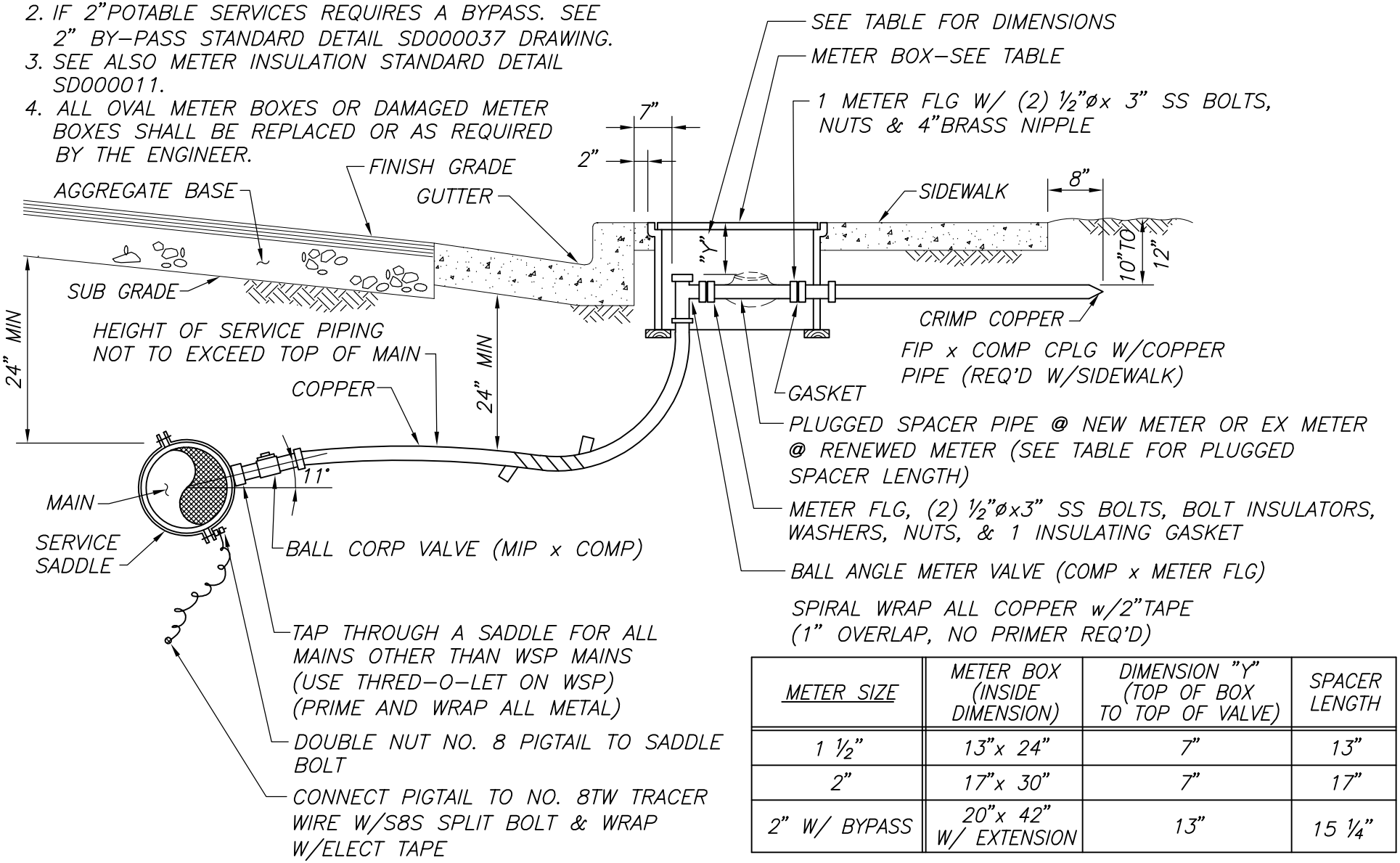

METER SIZE	METER BOX (INSIDE DIMENSION)	DIMENSION "Y" (TOP OF BOX TO TOP OF VALVE)	SPACER LENGTH
1 ½"	13"x 24"	7"	13"
2"	17"x 30"	7"	17"
2" W/ BYPASS	20"x 42" W/ EXTENSION	13"	15 ¼"

NEW OR RENEWED
1 ½" AND 2"COPPER SERVICES

NO SCALE	FILE NO. SD0006	APPROV. BY: EI	REV. DATE: JUL '19

Back to page 1

NOTES:

1. INSTALL METER BOX ON 2"x6"REDWOOD BLOCKING.
2. IF 2"POTABLE SERVICES REQUIRES A BYPASS. SEE 2" BY-PASS STANDARD DETAIL SD0037 DRAWING.
3. SEE ALSO METER INSULATION STANDARD DETAIL SD0011.
4. ALL OVAL METER BOXES OR DAMAGED METER BOXES SHALL BE REPLACED OR AS REQUIRED BY THE ENGINEER.

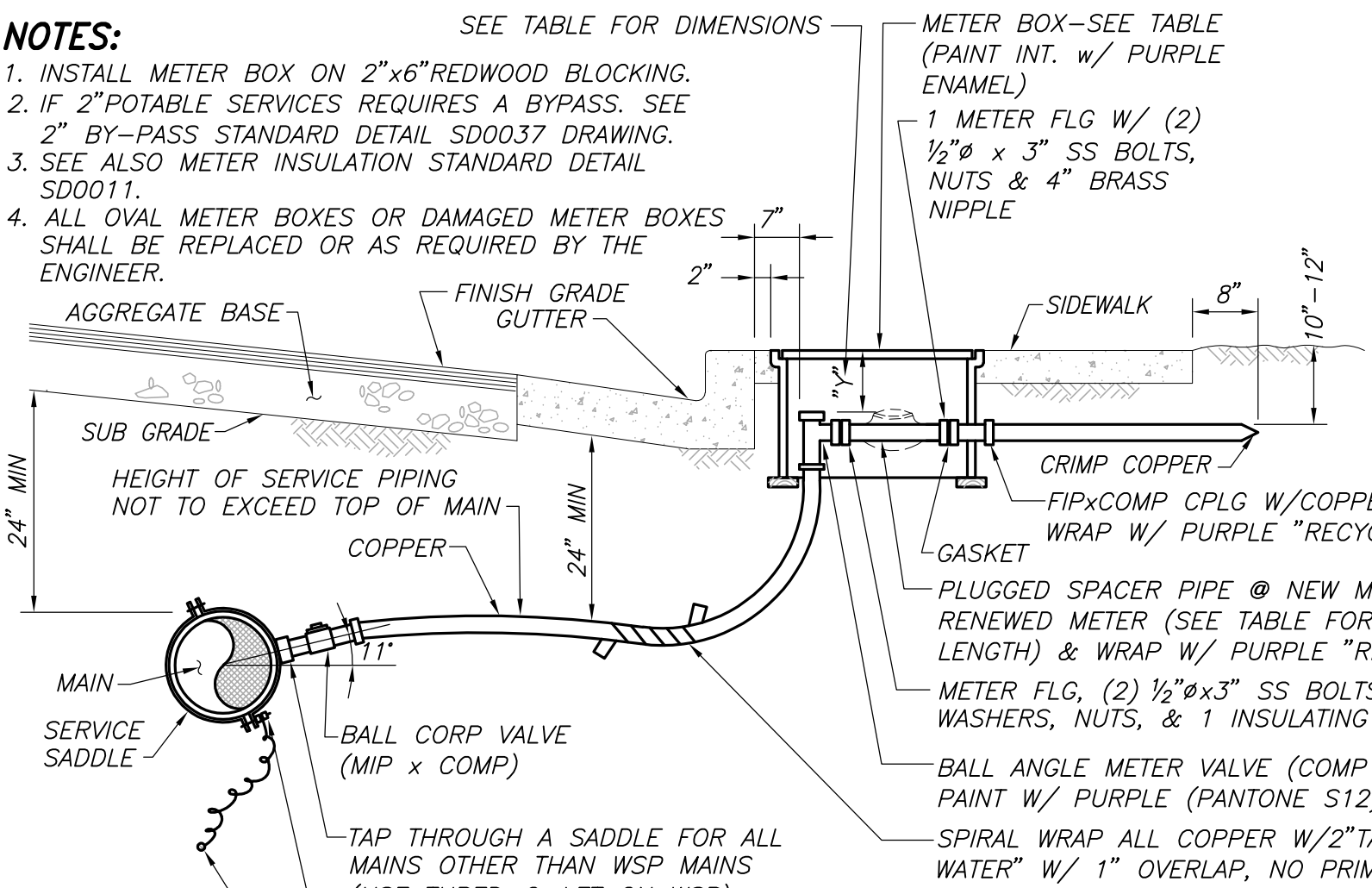

3"x 5" YELLOW CARD

ATTENTION

TO ACTIVATE
CONTACT MMWD RECYCLED WATER SECTION
PHONE # 945-1558

DO NOT REMOVE LOCK

I.D. TAG DETAIL

NIC, INSTALLED BY MMWD

METER SIZE	METER BOX (INSIDE DIMENSION)	DIMENSION "Y" (TOP OF BOX TO TOP OF VALVE)	SPACER LENGTH
1 ½"	13"x 24"	7"	13"
2"	17"x 30"	7"	17"
2" W/ BYPASS	20"x 42" W/ EXTENSION	13"	15 ¼"

NEW OR RENEWED RECYCLED 1 ½" AND 2"COPPER SERVICES

NO SCALE	FILE NO. SD0006R	APPROV. BY: EI	REV. DATE: JUL '19

Back to page 1

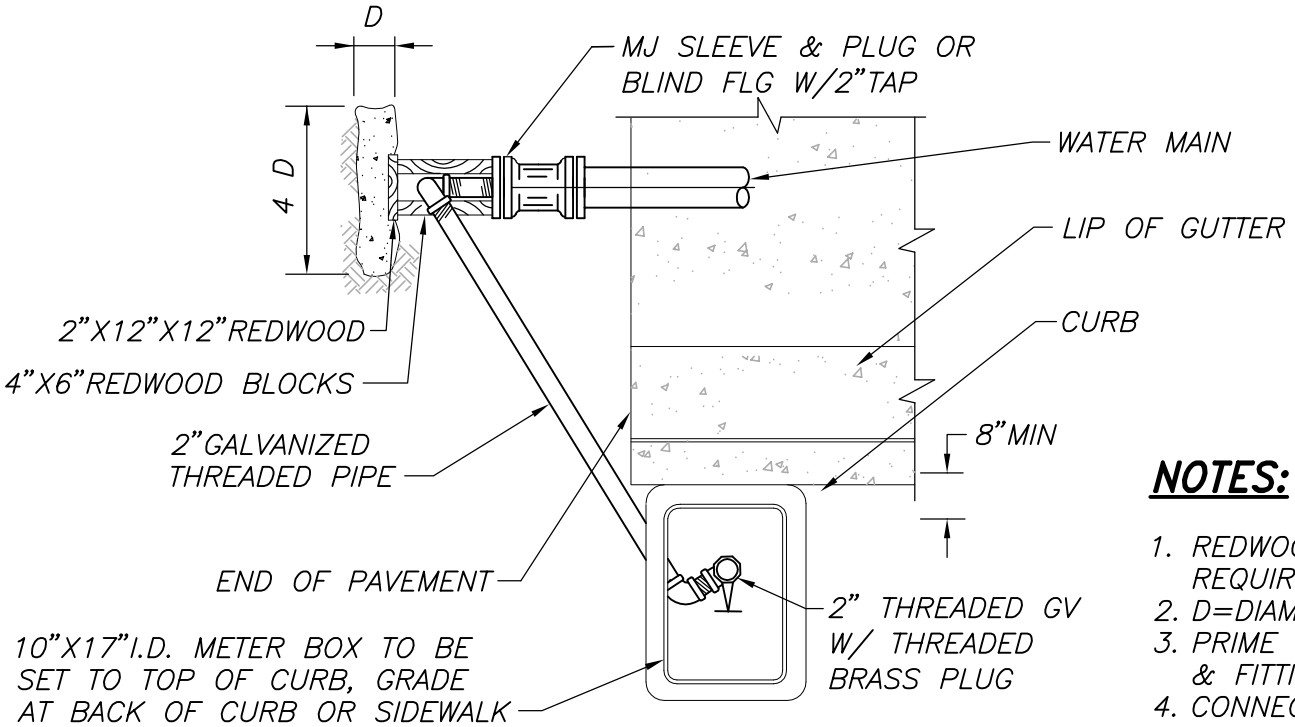

PLAN

NOTES:

1. REDWOOD & CONCRETE BLOCKING NOT REQUIRED ON WELDED STEEL MAINS.
2. D=DIAMETER OF PIPE
3. PRIME & WRAP ALL BLOWOFF PIPING & FITTINGS.
4. CONNECT TRACER WIRE TO SLEEVE
5. ON MAINS 10"AND GREATER A 4"BLOWOFF MAY BE REQUIRED

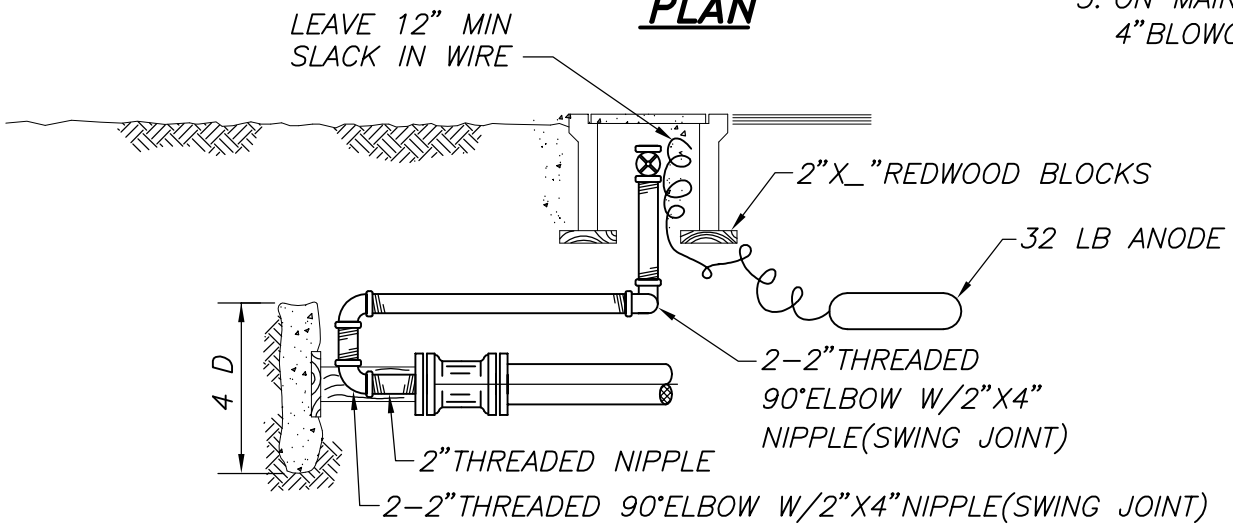

ELEVATION

2" BLOWOFF

NO SCALE	FILE NO. SD0007	APPROV. BY: RKT	REV. DATE: NOV '02

Back to page 1

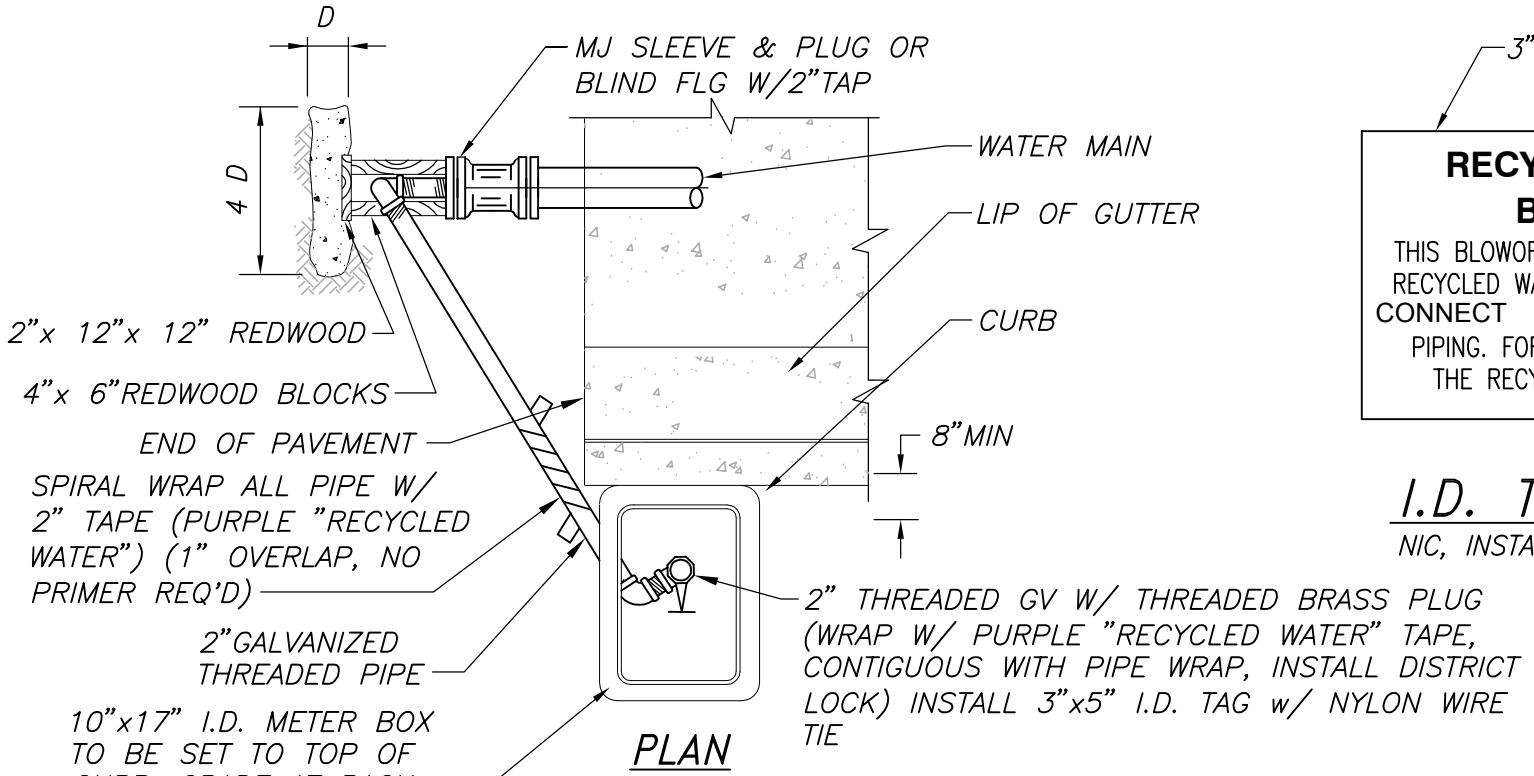

PLAN

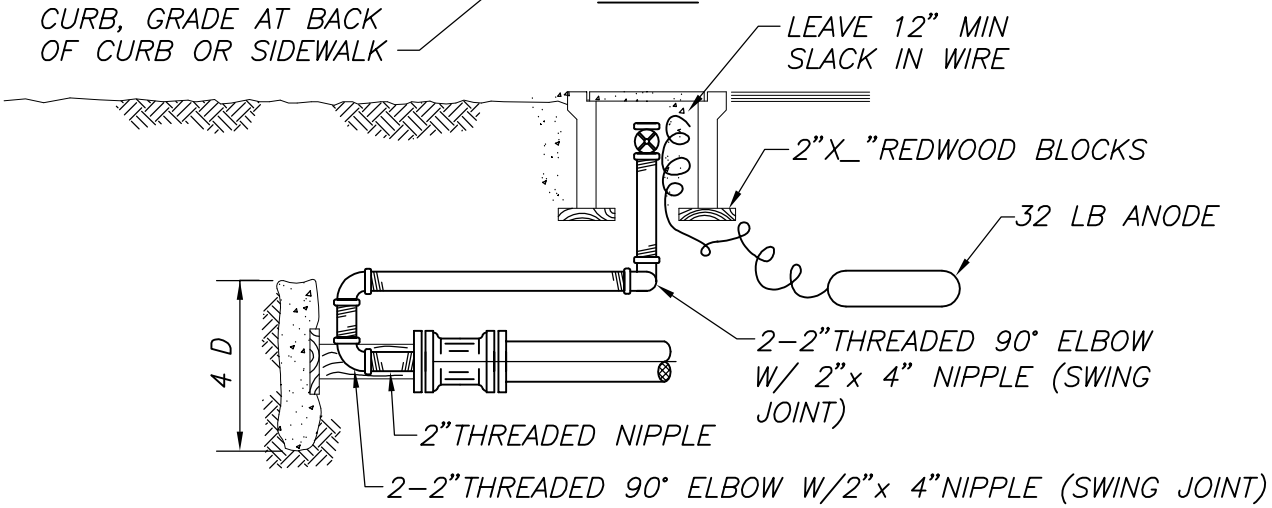

ELEVATION

3"x5" YELLOW CARD (LAMINATED)

RECYCLED WATER BLOW-OFF

THIS BLOWOFF IS CONNECTED TO THE RECYCLED WATER SYSTEM. **DO NOT CONNECT** TO ANY POTABLE WATER PIPING. FOR INFORMATION CONTACT THE RECYCLED WATER SECTION.

I.D. TAG DETAIL

NIC, INSTALLED BY MMWD

NOTES:

1. REDWOOD & CONCRETE BLOCKING NOT REQUIRED ON WELDED STEEL MAINS.
2. D=DIAMETER OF PIPE
3. PRIME & WRAP ALL BLOWOFF PIPING & FITTINGS.
4. CONNECT TRACER WIRE TO SLEEVE
5. ON MAINS 10"AND GREATER A 4"BLOWOFF MAY BE REQUIRED

2" BLOWOFF FOR RECYCLED WATER

NO SCALE	FILE NO. SD0007R	APPROV. BY: KF	REV. DATE: 1/06/04

Back to page 1

NOTES:

1. RUN NO. 8 COPPER TRACER WIRE BENEATH PIPE CONTINUOUSLY. AT EACH METALLIC FITTING, STRIP THE INSULATION OFF THE CONTINUOUS WIRE AND CONNECT NO. 8 "PIGTAIL" AS SHOWN.
2. WRAP ALL BARE WIRE WITH 6 MIL 3/4" PVC TAPE.
3. USE S-421 COPPER SLEEVE WHEN CADWELDING NO. 8 WIRE.
4. PRIME & WRAP ALL BARE PIPE, SERVICES AND FITTINGS.
5. ALL WIRE CONNECTIONS SHALL BE INSPECTED BEFORE WRAPPING.

LEGEND

- ● CADWELD
- ▲ SPLIT BOLT FOR NO. 8 TW COPPER WIRE

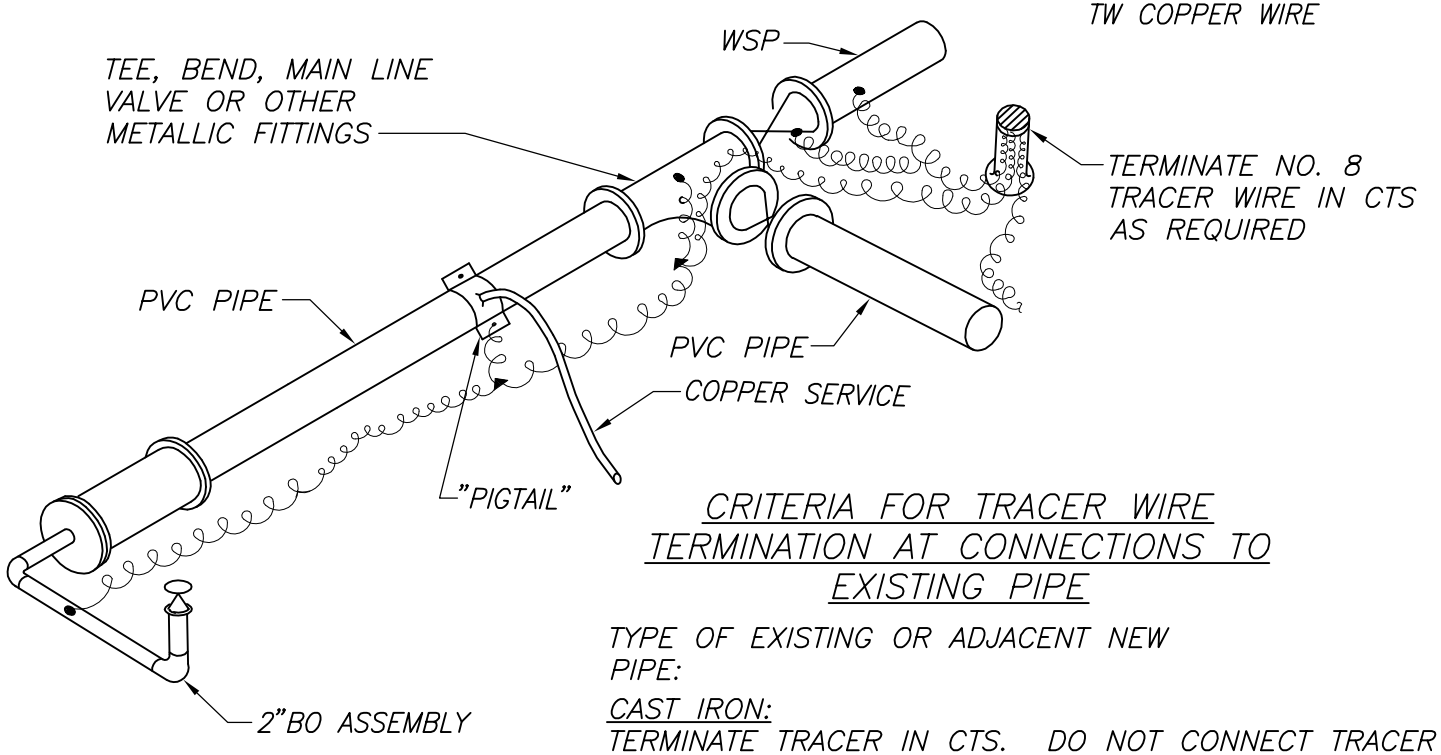

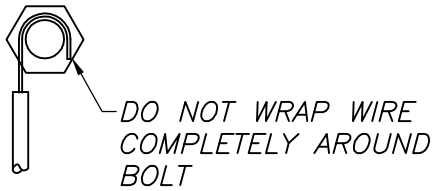

WIRE CONNECTION TO NUT

CRITERIA FOR TRACER WIRE TERMINATION AT CONNECTIONS TO EXISTING PIPE

TYPE OF EXISTING OR ADJACENT NEW PIPE:

CAST IRON:
TERMINATE TRACER IN CTS. DO NOT CONNECT TRACER WIRE TO EXISTING PIPE FITTINGS OR NEW FITTINGS IN CONTACT WITH EXISTING PIPE.

NON-METALLIC:
TERMINATE TRACER WIRE IN CTS WITH EXISTING WIRE.

STEEL:
TERMINATE TRACER WIRE IN CTS WITH TEST LEAD FROM EXISTING PIPE, OR CADWELD TO WSP IF NO CTS IS REQUIRED.

PIPELINE TRACER WIRE INSTALLATION

NO SCALE	FILE NO. SD0008	APPROV. BY: RKT	REV. DATE: 5-1-97

Back to page 1

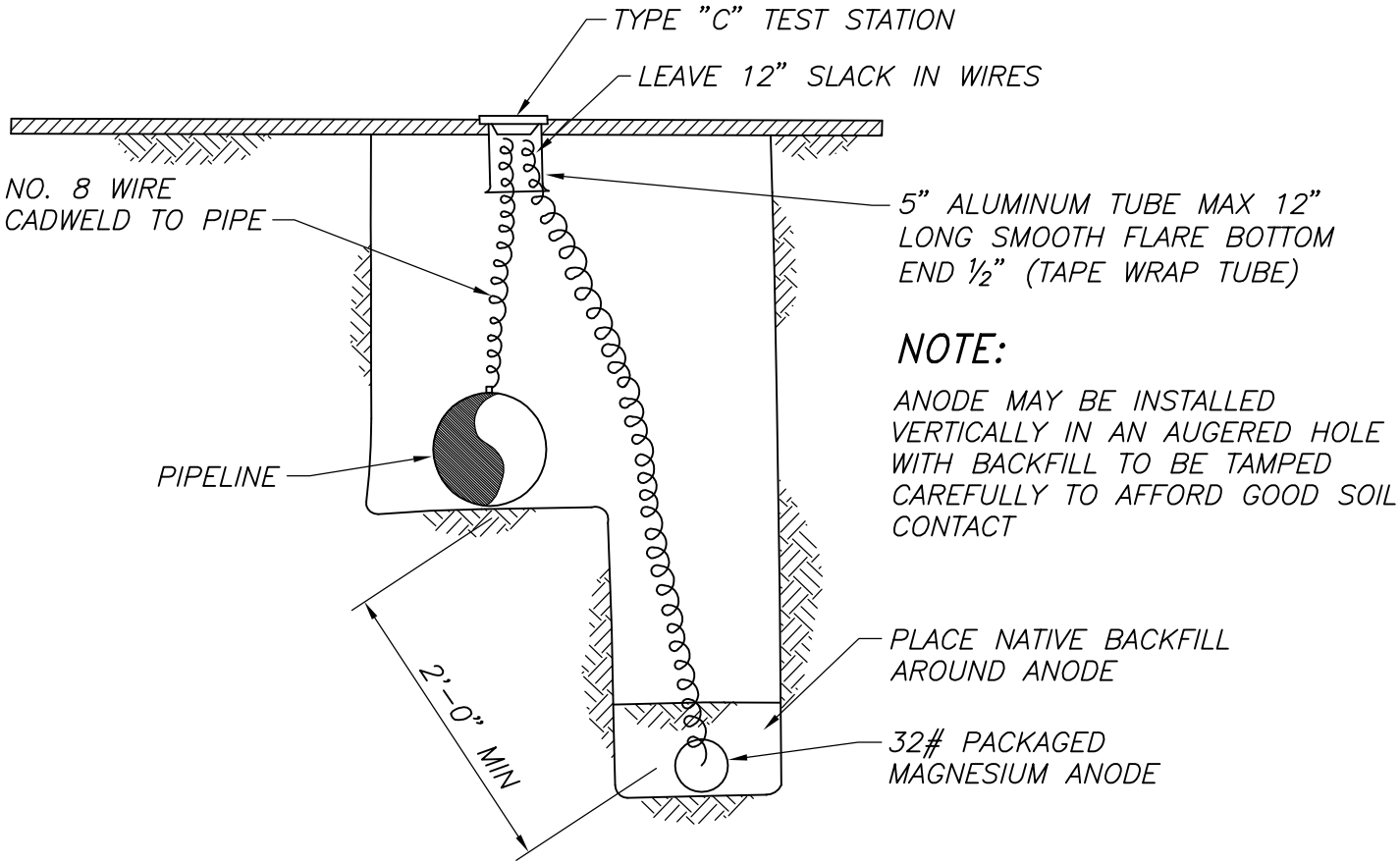

NOTE:

ANODE MAY BE INSTALLED VERTICALLY IN AN AUGERED HOLE WITH BACKFILL TO BE TAMPED CAREFULLY TO AFFORD GOOD SOIL CONTACT

TEST STATION WITH MAGNESIUM ANODE

NO SCALE	FILE NO. SD0009	APPROV. BY: RKT	REV. DATE: 5-12-95

Back to page 1

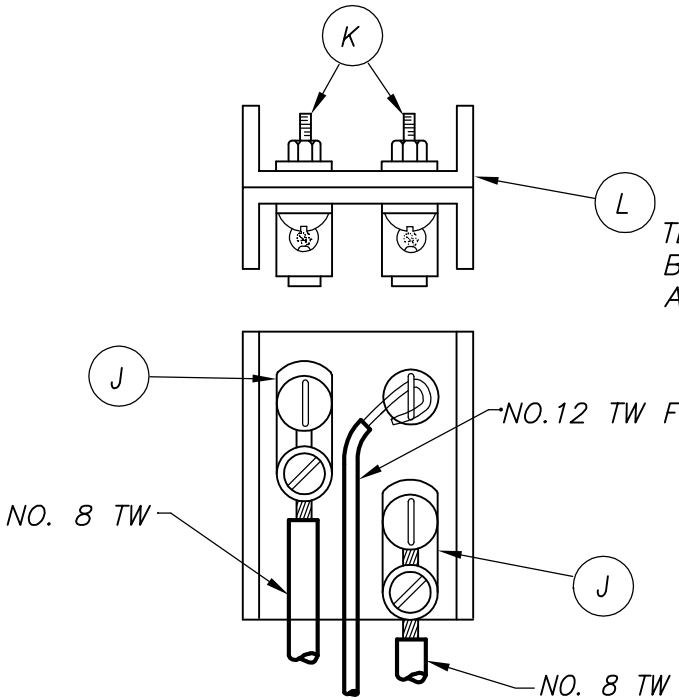

TERMINAL BLOCK ASSEMBLY

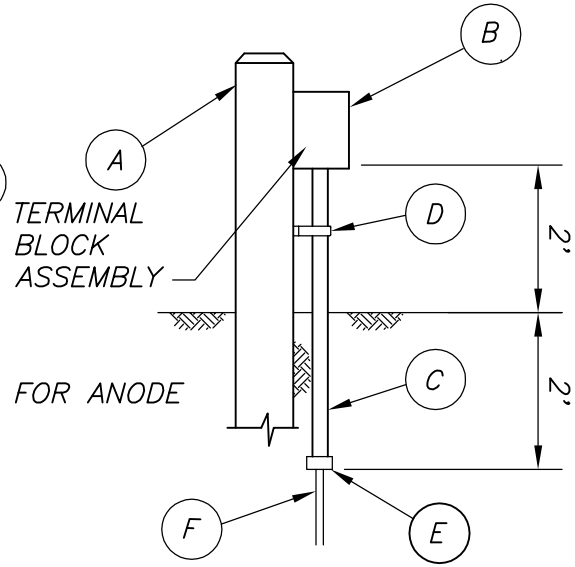

TYPE A

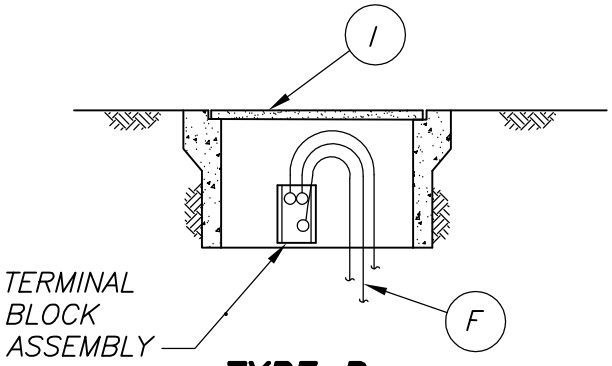

TYPE B

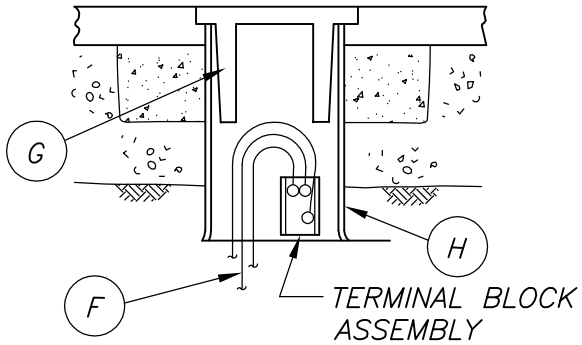

TYPE C

MATERIAL LIST	
ITEM	DESCRIPTION
A	4"X4" MARKER POST
B	1 1/4"CONDULET, TYPE E, W/BLANK COVER
C	1 1/4"CONDUIT, RIGID IRON GALV. W/BUSHING
D	1 1/4"CONDUIT STRAP
E	BUSHING
F	TW STRANDED WIRE–NO. 8 OR NO. 12
G	COVER (8" OR 5" CTS)
H	ALUMINUM TUBING 5" DIA.
I	3/4"METER BOX W/COVER
J	LUG, 50A
K	NO 12X3/4"R.H BRASS MACH. SCR. W/ NUT
L	1 5/8" SQ PHENOLIC TUBING

NOTES:

1. LEAVE SLACK IN TEST LEADS ADJACENT TO PIPE TO PREVENT DAMAGE BY BACKFILLING. LEAVE 12" OF SLACK IN TEST LEADS AT TEST STATIONS FOR TEST PURPOSES. HORIZ. RUNS ARE TO HAVE 30" MIN. COVER TO TEST STATION. TEST LEADS MAY BE RUN IN PIPE DITCH.
2. COLOR CODE TEST LEADS AT TEST STATION, WHEN INDICATED.
3. AFTER ELECTRICAL TEST OF INSULATING ADAPTORS, ALL PARTS OF VALVES, FLANGED INSULATING ASSEMBLIES, BONDS AND TEST LEADS, AND ALL OTHER BARE METAL & PIPE, SHALL BE PRIMED AND WRAPPED.
4. ITEM "B", DRILL HOLE IN BACK WALL AND MOUNT WITH STEEL ROUND". HEAD WOOD SCREW, NO. 10x1
5. WIRE TERMINATION TO BE MADE BY MMWD CORROSION DEPT.

TEST STATION

NO SCALE	FILE NO. SD0010	APPROV. BY: RKT	REV. DATE: 5–12–95

Back to page 1

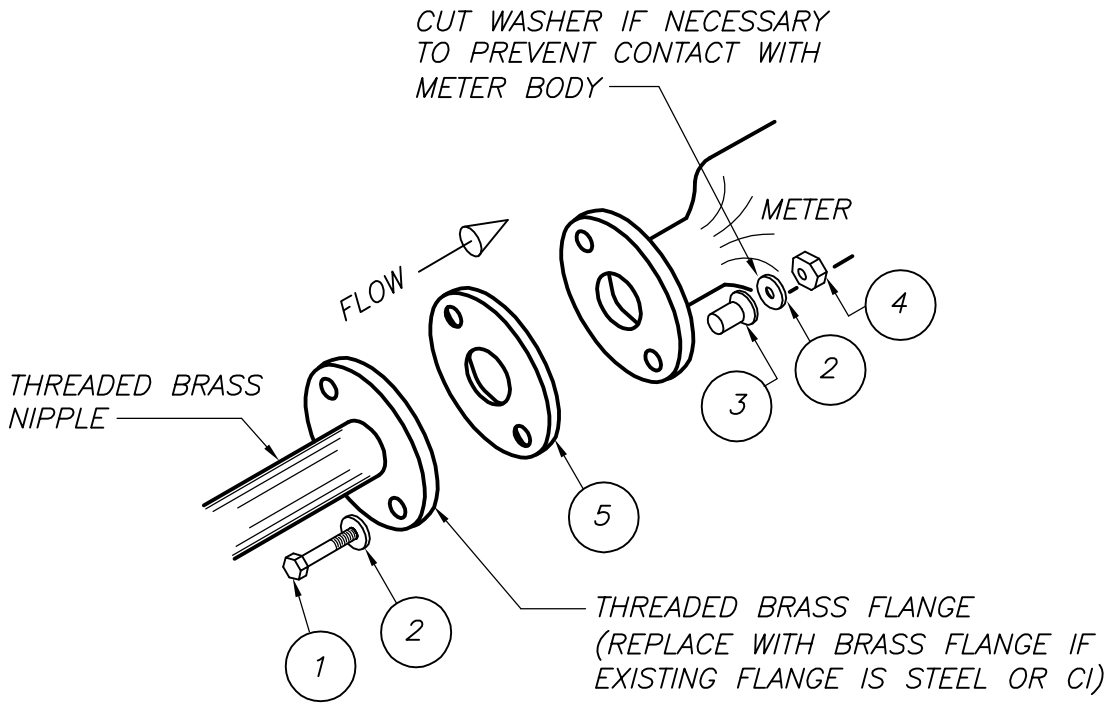

	ITEM	1 1/2"METER	2"METER	NO. REQ'D
1	MACHINE BOLT	1/2"X3"	5/8"X3"	2
2	STEEL WASHER	1/2"X1 1/8"	5/8"X1 1/4"	4
3	INSULATING SLEEVE	1/2"	5/8"	2
4	HEX. HEAD NUT	1/2"	5/8"	2
5	INSULATING GASKET	1 1/2"	2"	1

METER INSULATION 1 ½" & 2"

NO SCALE	FILE NO. SD0011	APPROV. BY: RKT	REV. DATE: 5-12-95

Back to page 1

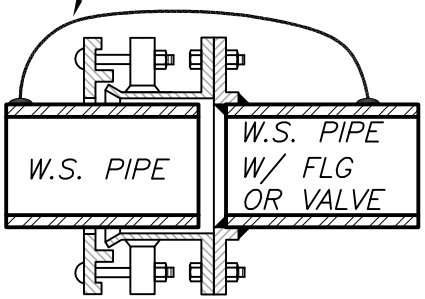

FLANGED COUPLING ADAPTER

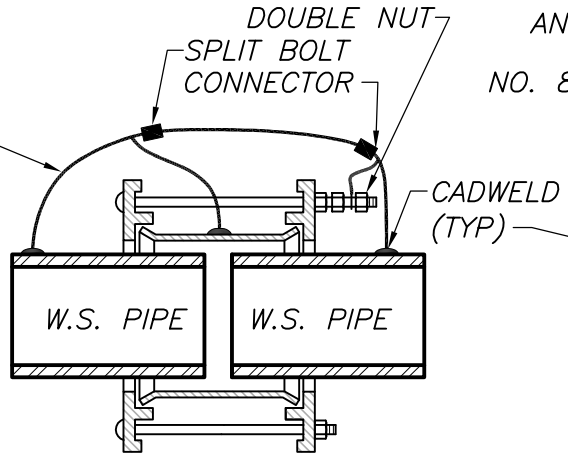

UNINSULATED BOLTED FLEX CPLG

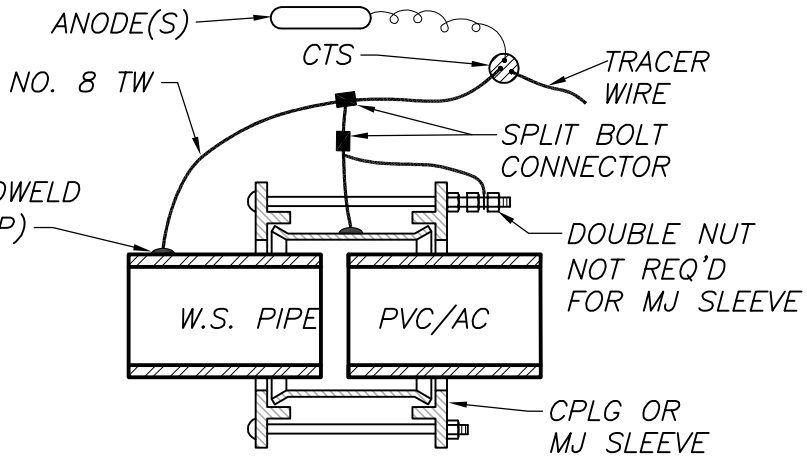

STEEL PIPE TO NONMETALLIC PIPE

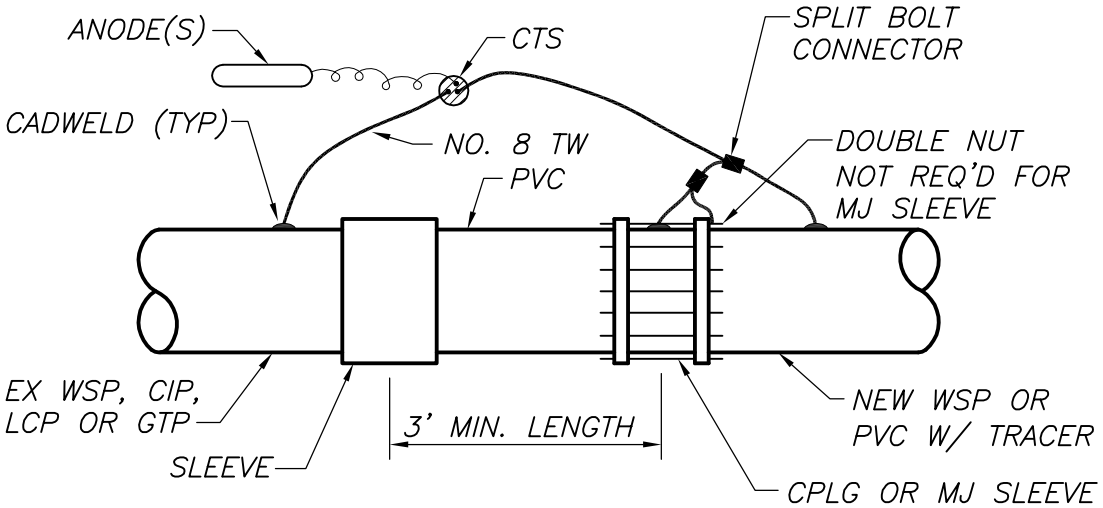

NONMETALLIC PIPE INSULATOR

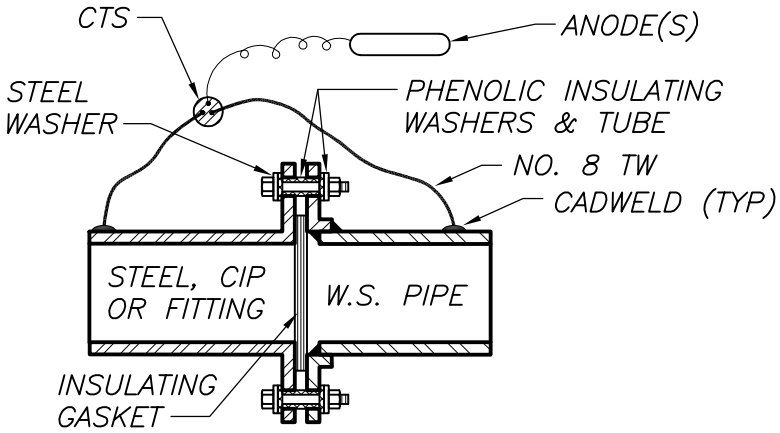

FLANGE INSULATOR

NOTES:

1. WRAP C.I. PIPE AND FITTINGS MIN. 4' AWAY FROM INSULATING JOINT ON C.I. SIDE
2. TAPE ALL BARE WIRING AND CONNECTORS WITH 7 MIL PVC TAPE BEFORE WRAPPING PIPE AND FITTINGS.

PIPELINE INSULATION AND BONDING JUMPER DETAILS

NO SCALE	FILE NO. SD0012	APPROV. BY: KMcD	REV. DATE: FEB. '11

Back to page 1

PIPE SUPPORT ASSEMBLY TO BE SUPPLIED BY CONTRACTOR

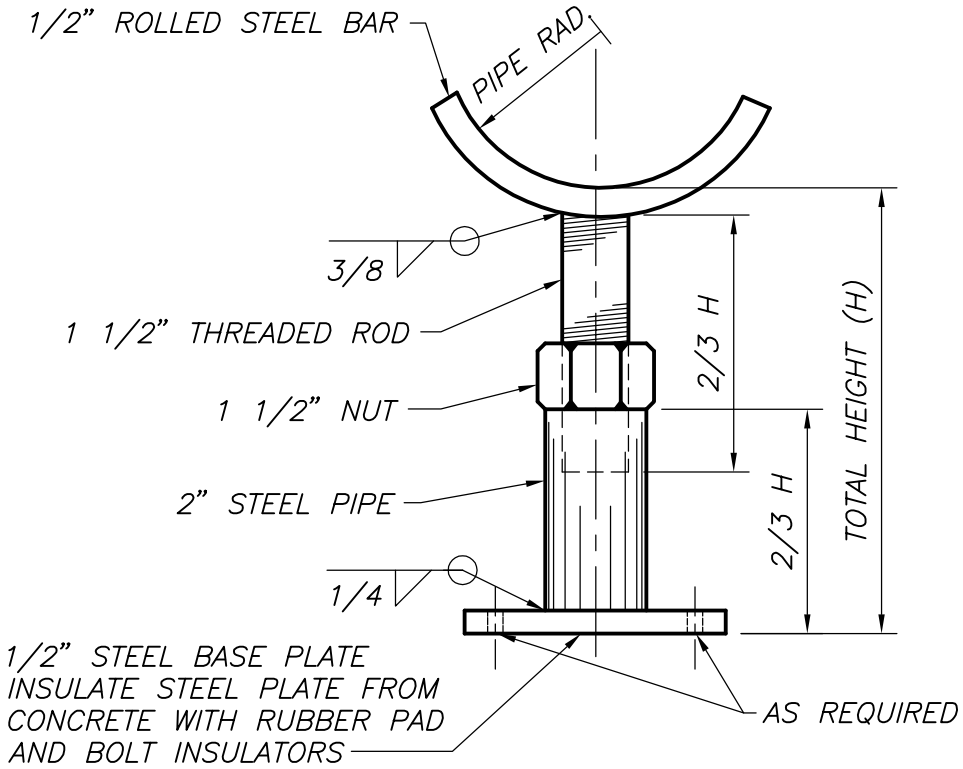

ELEVATION

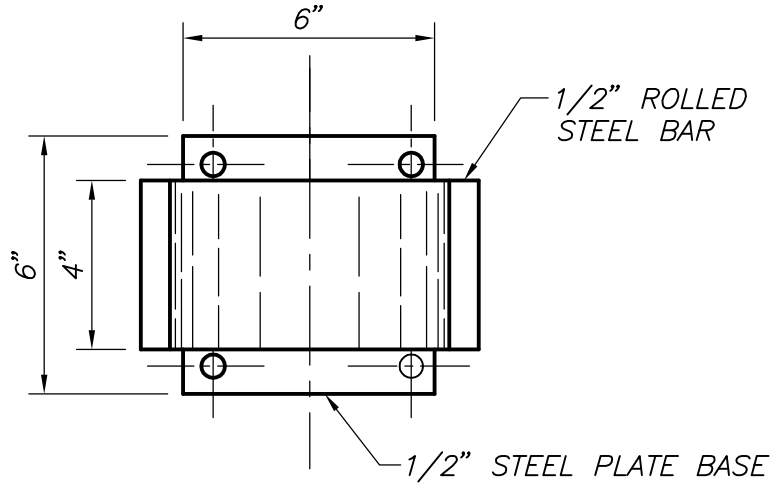

PLAN

NOTE:

GRINNELL NO. 264 MAY BE USED IN LIEU OF THE ADJUSTABLE PIPE SUPPORT DETAIL

ADJUSTABLE PIPE SUPPORT

NO SCALE	FILE NO. SD0013	APPROV. BY: RKT	REV. DATE: 5-12-95

Back to page 1

HARNESS JOINT ASSEMBLY TO BE SUPPLIED BY CONTRACTOR

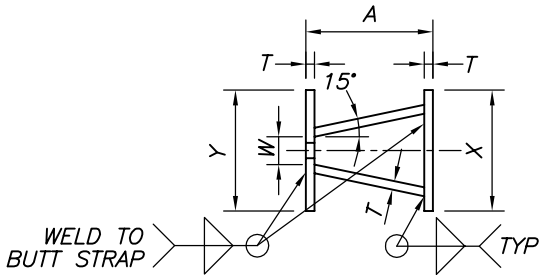

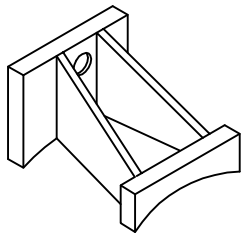

NOTE:

THE MINIMUM WELD THICKNESS SHALL BE 3/8 INCH.

HARNESS JOINT DIMENSIONS

ROD SIZE AND BUTT STRAP THICKNESS (IN.)						
PIPE O.D.	150 PSI		200 PSI		250 PSI	
	ROD SIZE	BUTT STRAP THICK	ROD SIZE	BUTT STRAP THICK	ROD SIZE	BUTT STRAP THICK
4 1/2	1/2	1/4	1/2	1/4	1/2	1/4
6 5/8	5/8	1/4	5/8	1/4	5/8	1/4
8 5/8	5/8	1/4	5/8	1/4	5/8	1/4
10 3/4	5/8	1/4	3/4	1/4	3/4	1/4
12 3/4	3/4	1/4	7/8	1/4	7/8	1/4
14	3/4	3/8	7/8	3/8	1	3/8
16	7/8	3/8	1	3/8	1 1/8	3/8
18	1	3/8	1 1/8	3/8	1 1/4	3/8
20	1	3/8	1 1/8	3/8	1 1/4	3/8
24	1 1/4	1/2	1 1/2	1/2	1 1/2	1/2

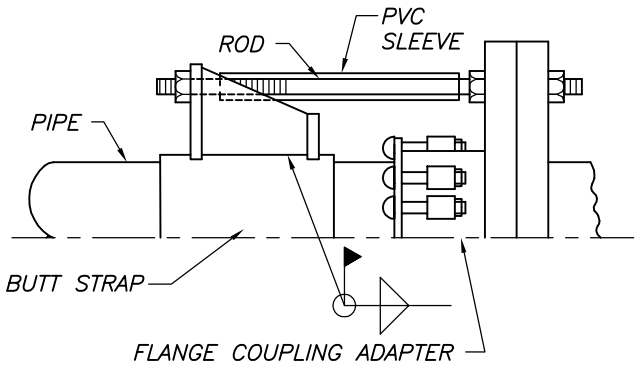

PLAN

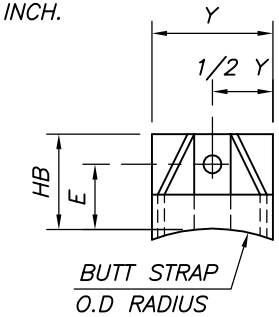

NOTES:

1. THE SIZES LISTED ABOVE ARE MINIMUM SIZES. FOR PIPE OF LARGER O.D. ENGINEERING WILL SPECIFY DESIGN.
2. TWO RODS REQUIRED FOR EACH HARNESS ASSEMBLY.
3. SPLIT BUTT STRAPS TO BE INSTALLED WITH JOINT WELDS ON TOP AND/OR BOTTOM.

ROD SIZE	STRAP WIDTH	T	A	X	Y	W	HB	E	HF	HOLE DIA
1/2	6	1/4	4 1/2	4 1/2	4 1/2	1 1/4	3 3/4	2 7/8	1 7/8	5/8
5/8	7	3/8	5	5	5	1 3/8	3 7/8	3	2	3/4
3/4	7	3/8	5	5	5	1 1/2	4 1/8	3 1/8	2	7/8
7/8	12	1/2	5 1/2	5	5	1 5/8	4 1/4	3 1/8	2	1
1	14	1/2	5 3/4	6	6	1 3/4	4 1/2	3 1/4	2	1 1/8
1 1/8	17	1/2	7	7	7	1 7/8	4 3/4	3 5/8	2 1/2	1 1/4
1 1/4	18	5/8	7 1/2	7 1/2	7 1/2	2	5	3 3/4	2 1/2	1 3/8
1 1/2	22	3/4	10	10	10	2 1/4	5 1/2	3 7/8	2 1/2	1 5/8

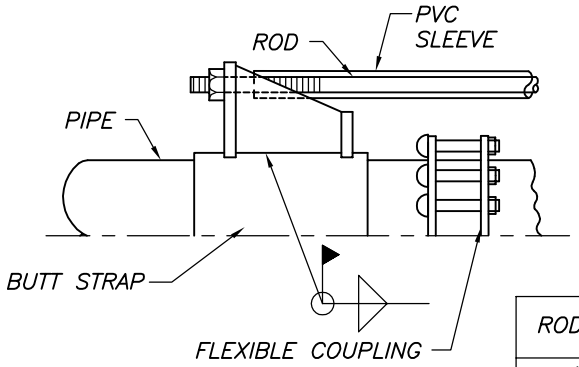

PLAN

NOTES:

DIMENSIONS ARE BASED ON A.W.W.A. DESIGN MANUAL M-11 SECTION 13.10 AND ASSOCIATED TABLES AND FIGURES. THE FOLLOWING ARE MATERIAL CONFORMANCE SPECIFICATIONS.

ROD SIZE	PVC SCH 40 SLEEVE SIZE
1/2"	3/4"
5/8"-3/4"	1"
7/8"-1 1/4"	1 1/2"
1 1/2"	2"

SPECIFICATIONS:

RODS ——— ASTM A193, GRADE B7
NUTS ——— ASTM A194, GRADE 2H
LUG MATERIAL ——— ASTM A283, GRADE C OR ASTM A36
RODS ARE TO HAVE UNC THREADS FOR SIZES<1INCH
RODS ARE TO HAVE SUN THREADS/INCH FOR SIZES>1

JOINT HARNESS

NO SCALE	FILE NO. SD0014	APPROV. BY: RKT	REV. DATE: 5-13-97

Back to page 1

CI MONUMENT RING AND COVER, PHOENIX P-2001-E, OR ARTMARK APC-51, OR BROOKS 10 ¼" TRAFFIC BOX, OR AMERICAN BRASS AND IRON FOUNDRY MONUMENT COVER OR FORNI CORPORATION "IRONSIDE" TYPE "A" BOX & LID OR APPROVED EQUAL. THE WORD "MONUMENT" SHALL BE CLEARLY STAMPED ON ALL COVER.

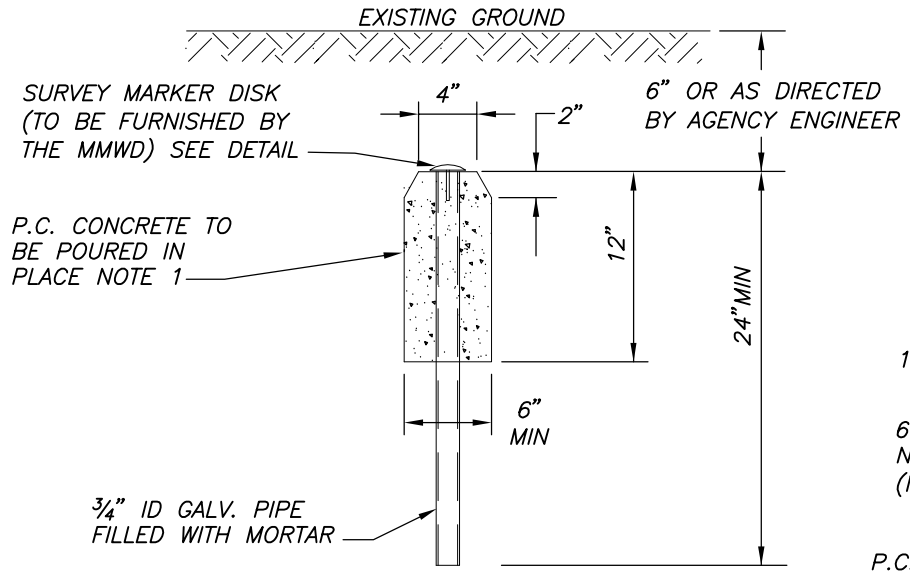

PIPE MONUMENT

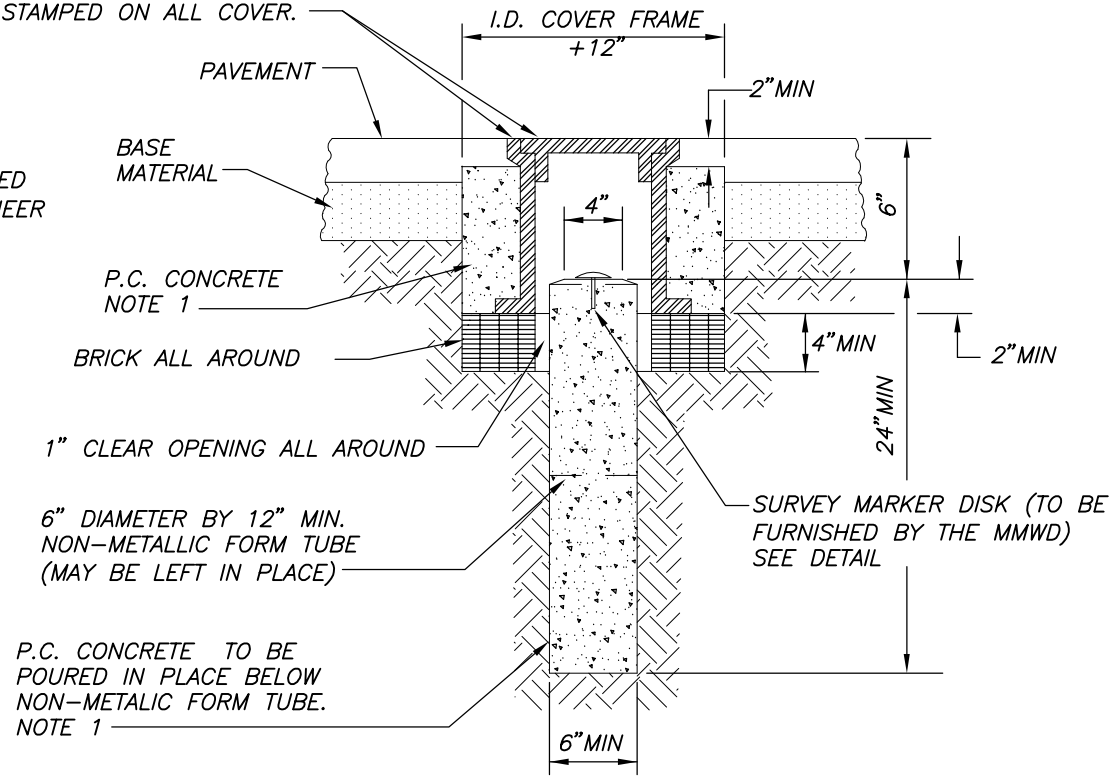

STREET MONUMENT

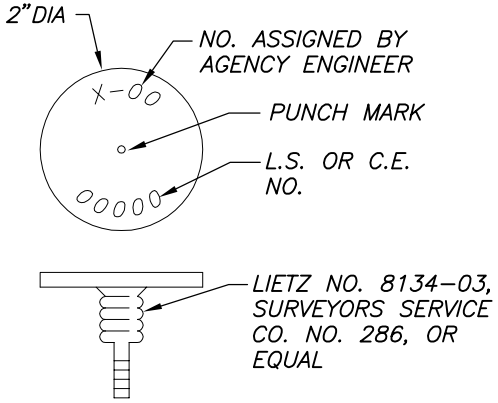

DETAIL

NOTES:

1. ALL PORTLAND CEMENT CONCRETE SHALL BE CLASS "B" OR "MINOR" WITH 1"MAX AGGREGATE.
2. IF RING & COVER ARE SET AFTER PAVING, EXPOSED CONCRETE WILL NOT BE ALLOWED, EXCEPT AS PERMITTED BY AGENCY ENGINEER IN WRITING.
3. MONUMENTS SHALL BE SET AT THE LOCATIONS DESIGNATED ON THE PLANS AND ON THE FINAL MAP.
4. STREET MONUMENTS SHALL BE USED IN ALL PAVED AREAS AND OTHER LOCATIONS AS SHOWN ON THE PLANS. IRON PIPE MONUMENTS SHALL BE USED AT ALL OTHER LOCATIONS IN THE PUBLIC RIGHT OF WAY.
5. NO CONCRETE SHALL BE PLACED PRIOR TO EXCAVATION INSPECTION BY THE AGENCY ENGINEER.
6. MONUMENTS SET ON SUBDIVISION BOUNDARIES SHALL BE 3/4" DIAMETER GALVANIZED IRON PIPE 24"LONG FILLED WITH MORTAR.

SURVEY MONUMENT

NO SCALE	FILE NO. SD0015	APPROV. BY: RKT	REV. DATE: 11-96

Back to page 1

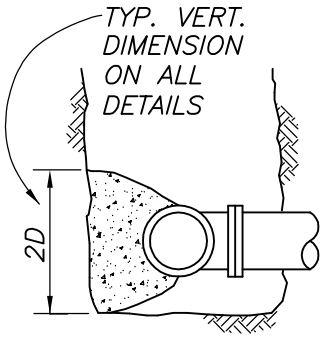

ELEVATION TEE

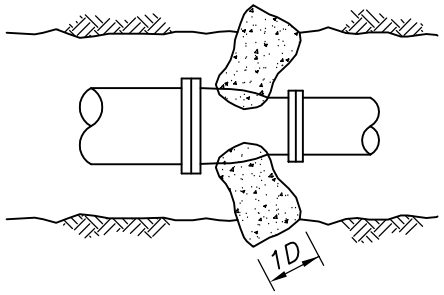

PLAN OF REDUCER

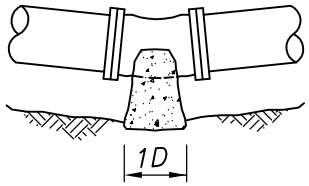

PLAN OF 11 1/4° BEND

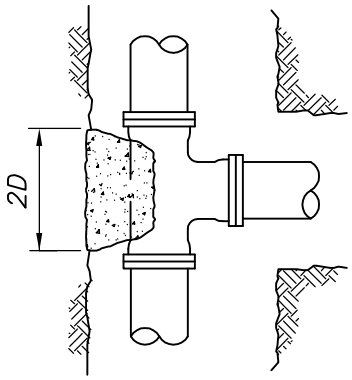

PLAN OF TEE

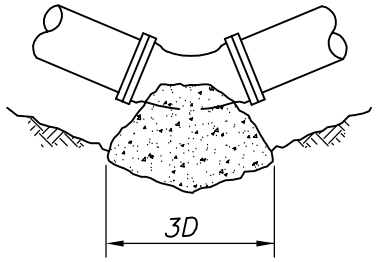

PLAN OF 45° BEND

NOTES:

1. ALL CONCRETE BLOCKING TO BE SET AGAINST UNDISTURBED GROUND. "D" INDICATES NOMINAL PIPE DIA. BLOCK SIZE BASED ON 3000 LBS/SQ FT SOIL. IF BEARING VALUE OF SOIL IS LESS, THE "D" VALUE SHALL BE INCREASED ACCORDINGLY. MINIMUM BLOCK DIMENSION SHALL BE 1 FOOT SQUARE.
2. THIS DETAIL WILL APPLY TO ALL PUSH-ON, FLEXIBLE OR OTHERWISE UNRESTRAINED JOINTS. ALSO APPLIES TO WELDED STEEL WHEN USED IN CONNECTION WITH FLEXIBLE JOINTS.
3. FITTINGS SHALL BE PRIMED AND WRAPPED PRIOR TO INSTALLATION OF CONCRETE BLOCKS.
4. CONCRETE SHALL NOT BE PLACED ON, OR AROUND BELLS OR BOLTS.

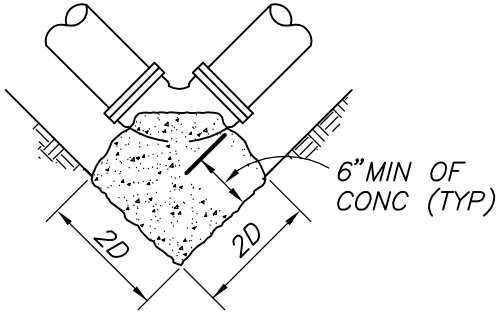

PLAN OF 90° BEND

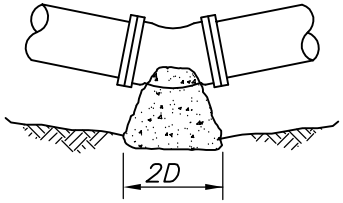

PLAN OF 22 1/2° BEND

JOINT BLOCKING

NO SCALE	FILE NO. SD0017	APPROV. BY: RKT	REV. DATE: 5-12-95

Back to page 1

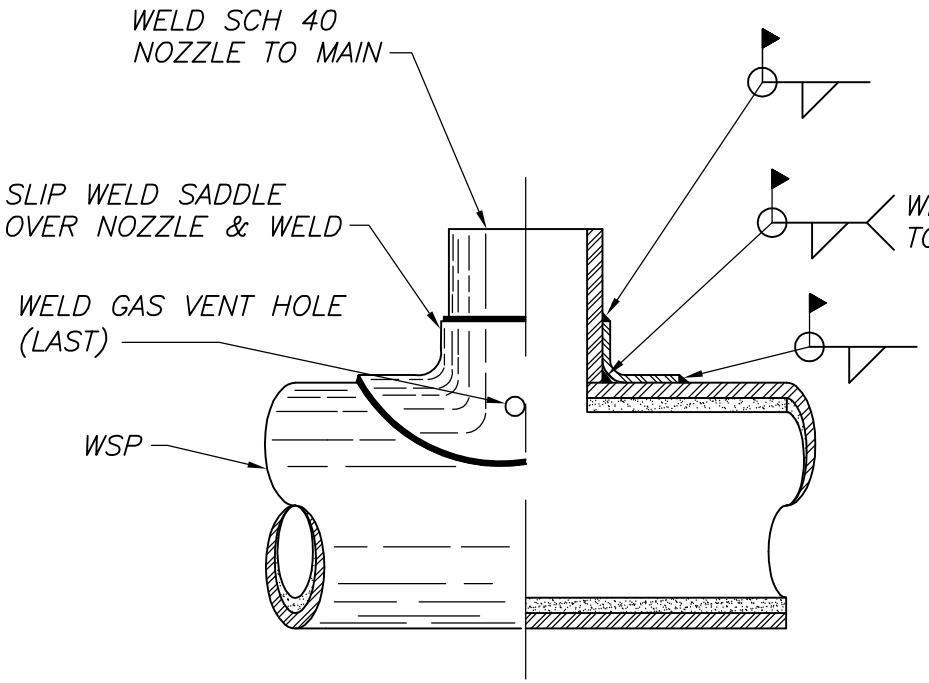

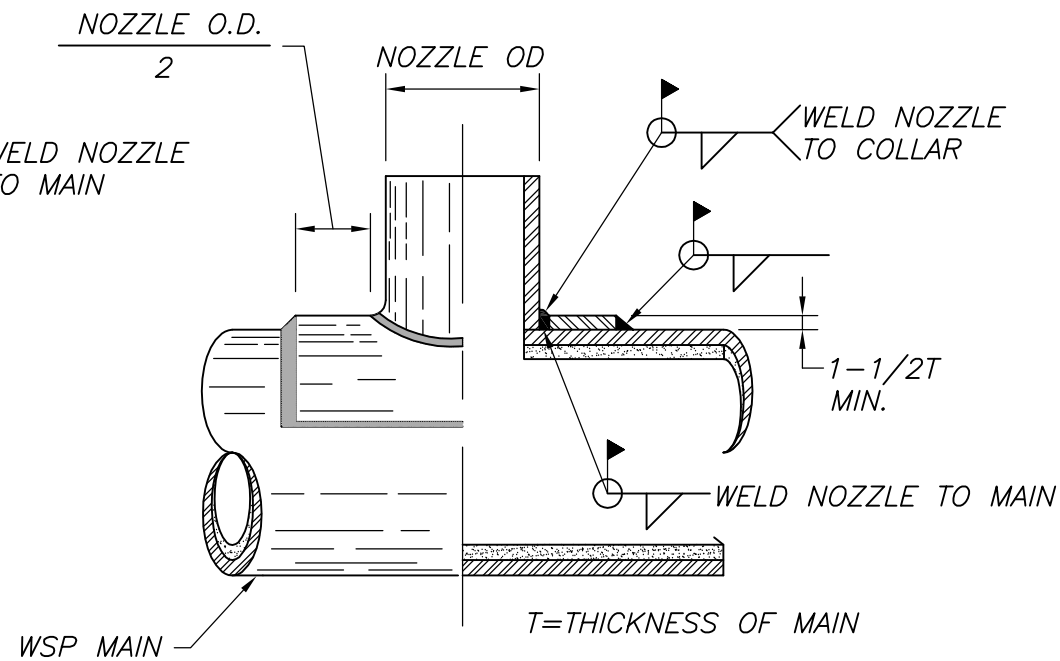

WELD SADDLE

REINFORCING COLLAR

WELDED OUTLET

SCALE: NTS	FILE NO. SD0018	APPROV. BY: JM	REV. DATE: 4-02-09

Back to page 1

CASING SCHEDULE	
WELDED STEEL PIPE O.D.	MIN. CASING DIA O.D.
6.625"	12"
8.625"	14"
10.75"	16"
12.75"	18"
14"	20"
16"	22"
18"	24"
20"	26"
22"	28"
24"	30"
30"	36"
34"	40"

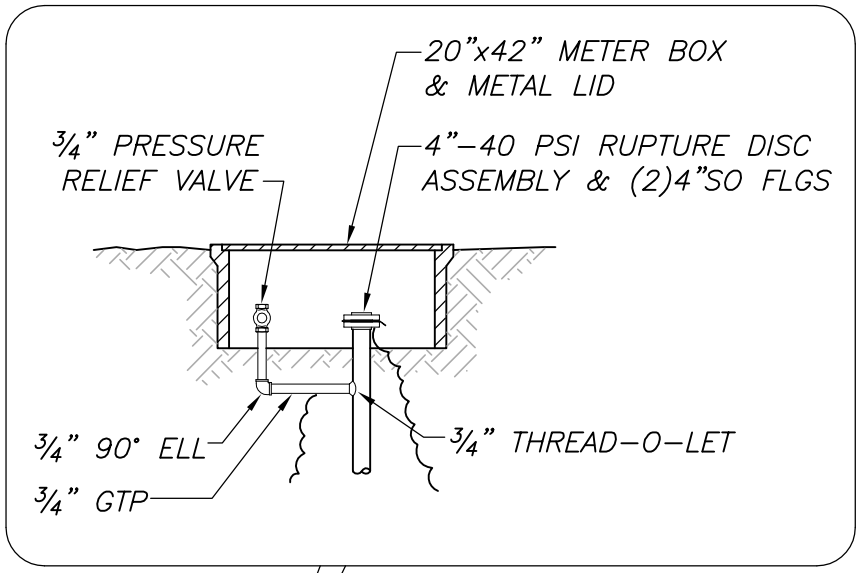

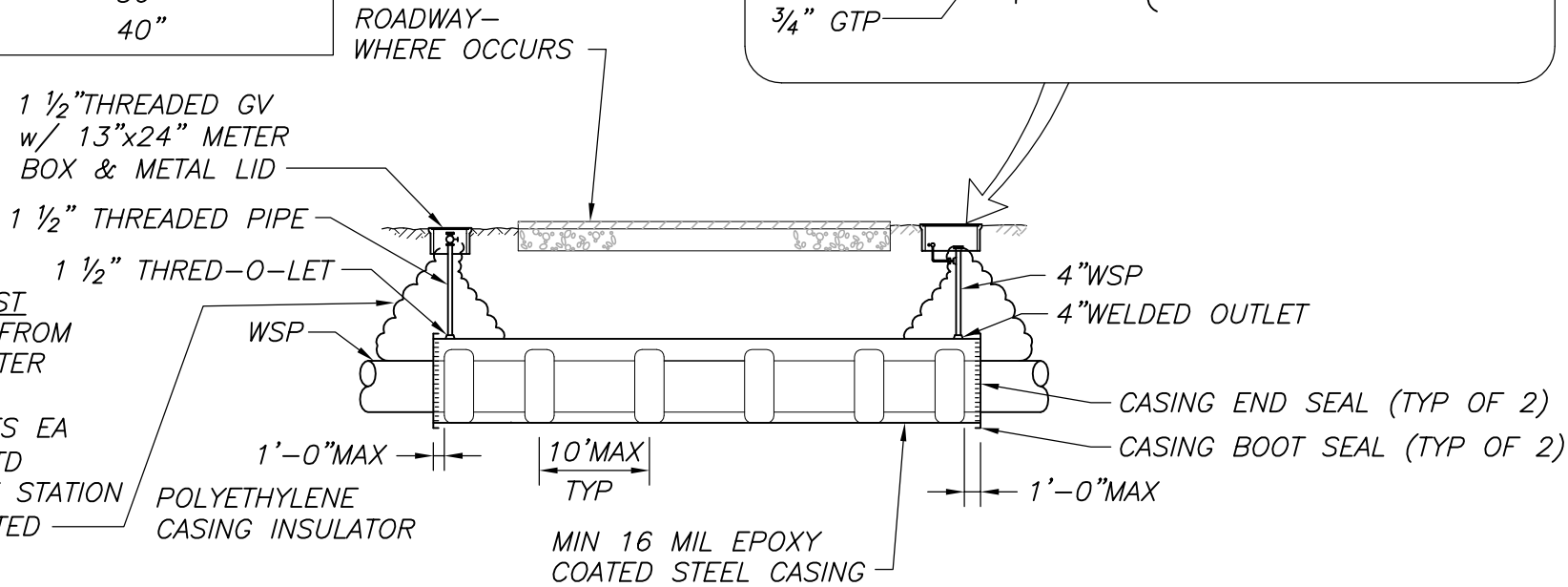

TYPE "B" CORROSION TEST STATIONS: BRING LEADS FROM CASING & MAIN INTO METER BOXES AND CONNECT TO ANODES (2–32LB ANODES EA BOX), TYP OF 2. SEE STD DETAIL, FOR OTHER TEST STATION DETAILS NOT SHOWN/NOTED

ELEVATION

NOTE:

1. CONTRACTOR SHALL FURNISH ALL MATERIAL FOR CASED CROSSING EXCEPT WATER LINE, METER BOXES & CORROSION TEST STATIONS.
2. SET PRESSURE RELIEF VALVE FOR 30 PSI MAX.

CASED CROSSING

NO SCALE	FILE NO. SD0019	APPROV. BY: KMcD	REV. DATE: 7/5/11

Back to page 1

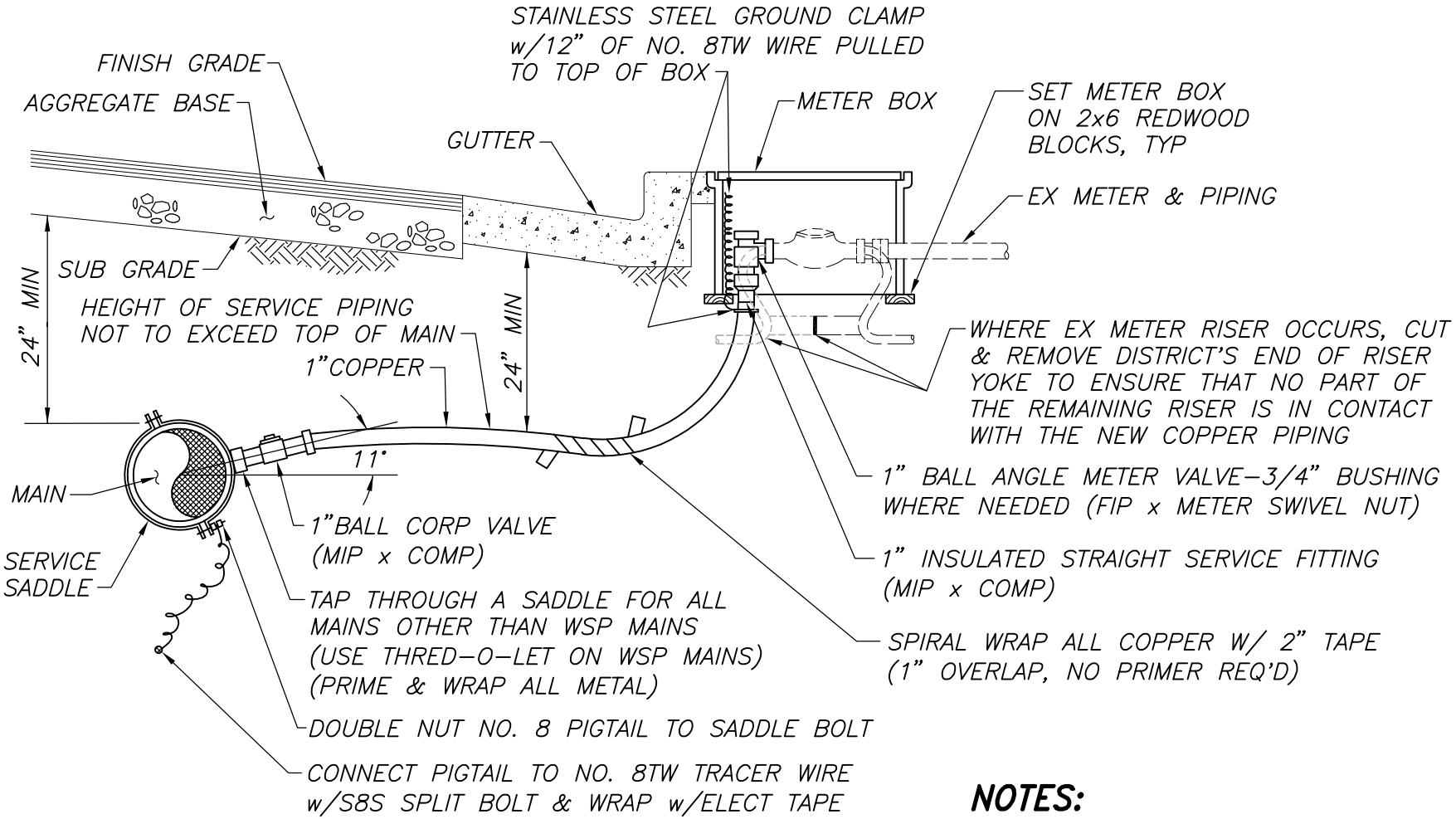

NOTES:

1. ALL OVAL METER BOXES OR DAMAGED METER BOXES SHALL BE REPLACED OR AS REQUIRED BY THE ENGINEER.

RENEWED 1" COPPER SERVICE

NO SCALE	FILE NO. SD0021	APPROV. BY: EI	REV. DATE: JUL '19

Back to page 1

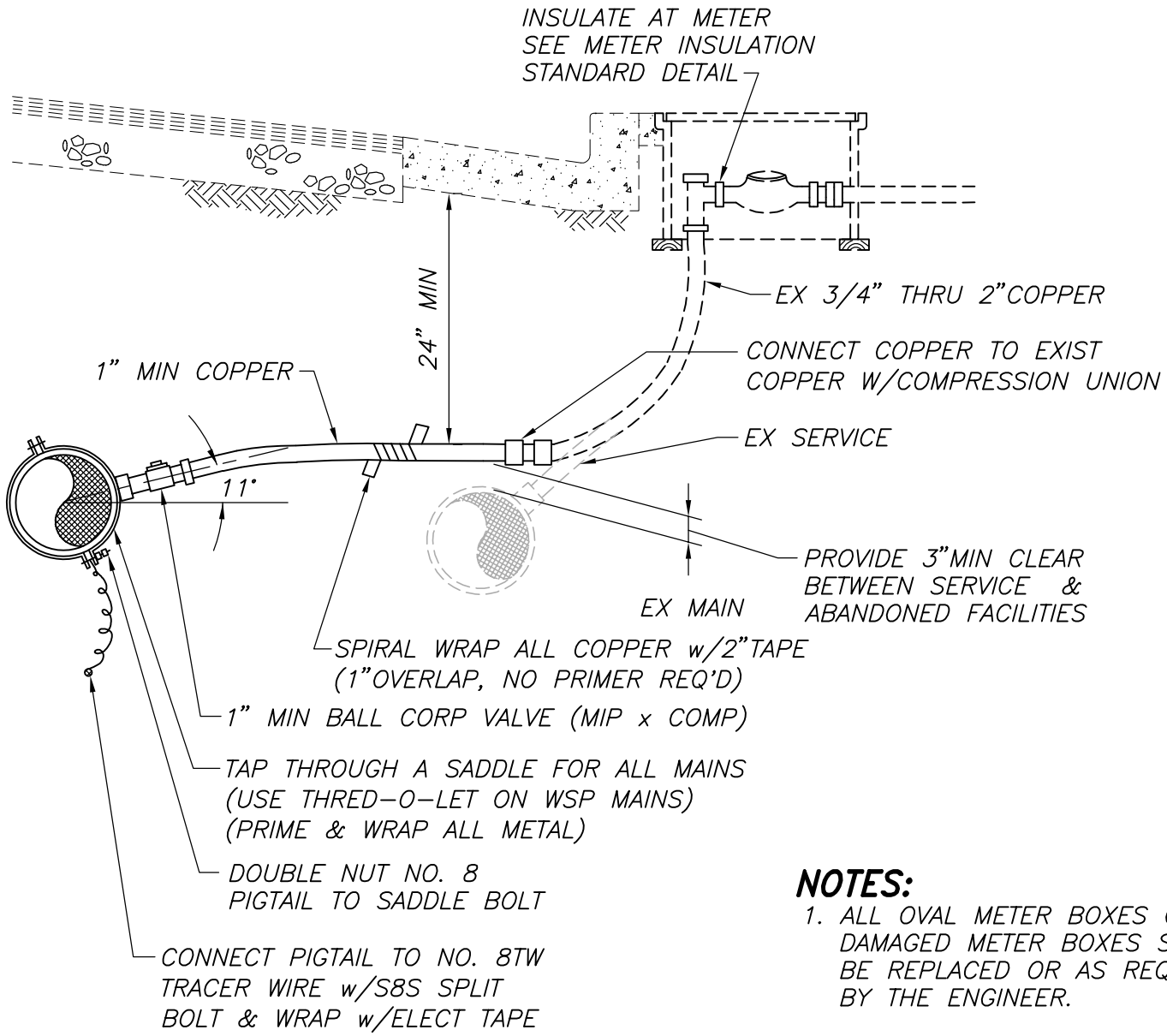

NOTES:

1. ALL OVAL METER BOXES OR DAMAGED METER BOXES SHALL BE REPLACED OR AS REQUIRED BY THE ENGINEER.

TRANSFERRING A 1" THRU 2" "LONG" COPPER SERVICE

NO SCALE	FILE NO. SD0022	APPROV. BY: EI	REV. DATE: JUL '19

Back to page 1

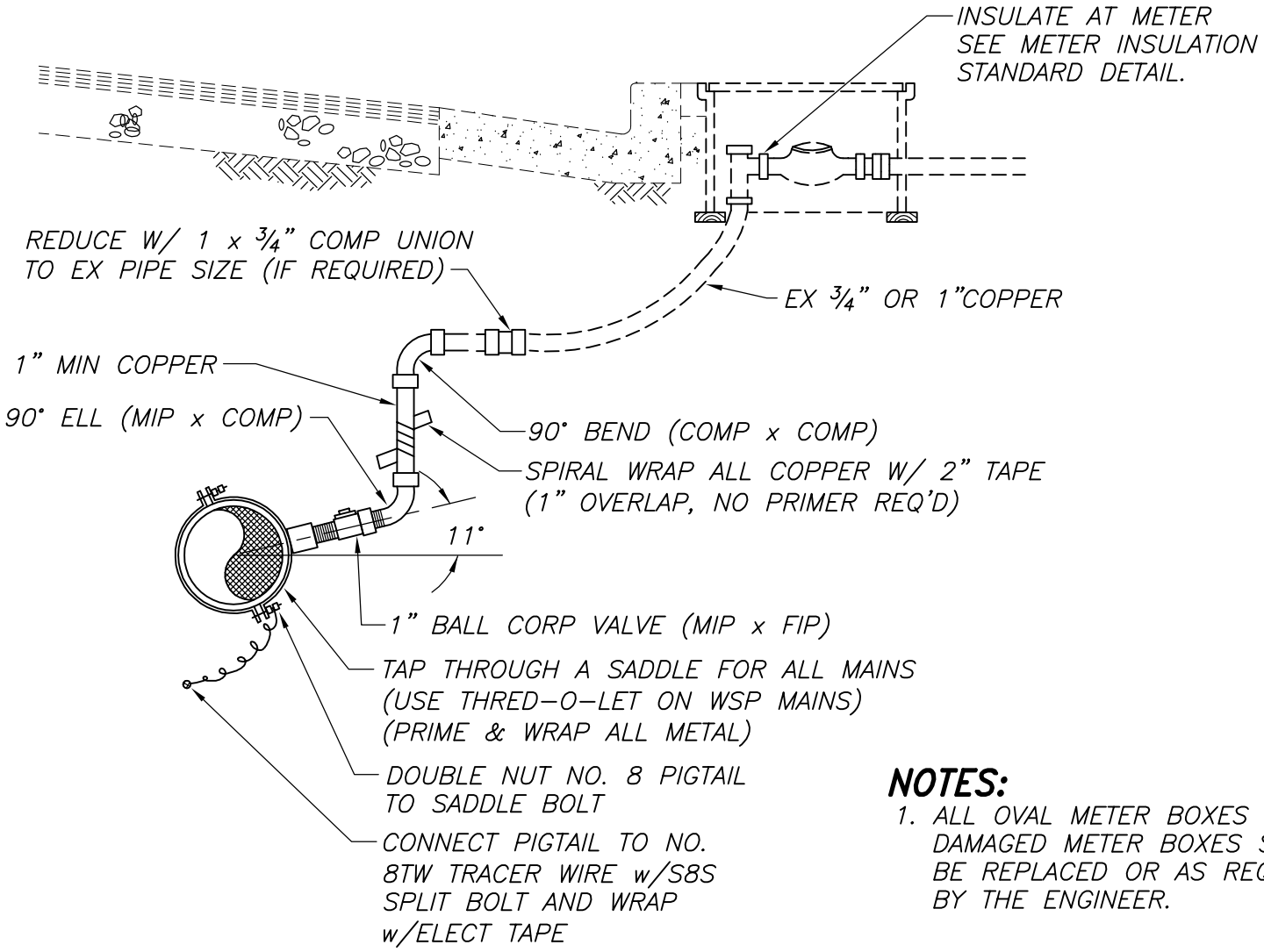

NOTES:

1. ALL OVAL METER BOXES OR DAMAGED METER BOXES SHALL BE REPLACED OR AS REQUIRED BY THE ENGINEER.

TRANSFERRING A 1" "SHORT" COPPER SERVICE

SCALE: NTS	FILE NO. SD0023	APPROV. BY: EA	REV. DATE: 7-29-16

Back to page 1

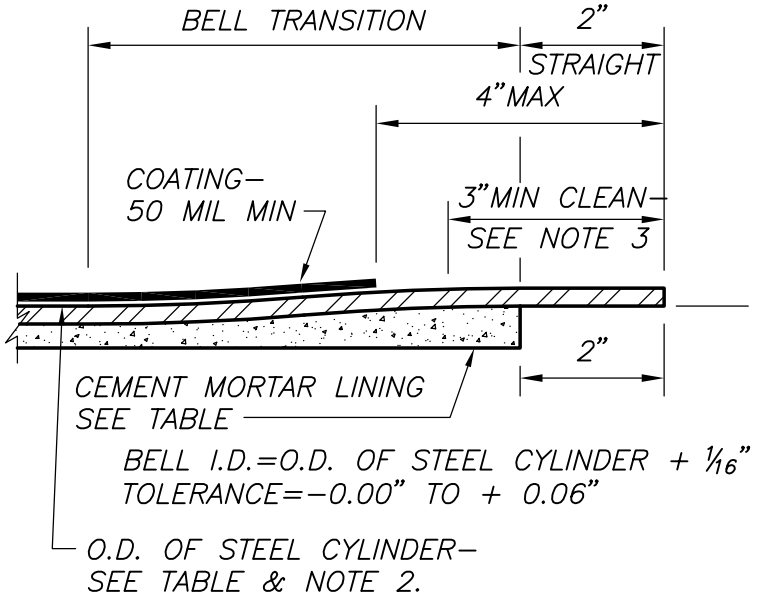

TYPICAL BELL END DETAIL

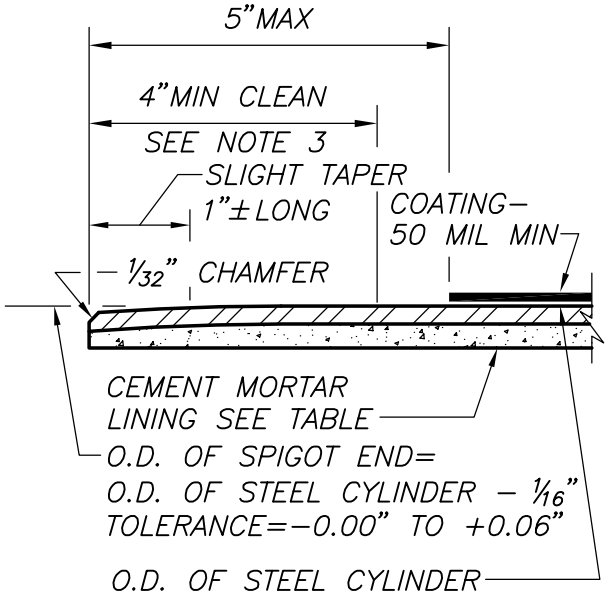

TYPICAL SPIGOT END DETAIL

NOMINAL PIPE SIZE	STEEL CYLINDER		LINING THICKNESS (TOLERANCE= –1/16" TO +1/8")	MIN PIPE I.D.
	O.D.	MIN WALL THICKNESS (+0.015" TO –0.030")		
4"	4.500"	0.135"	1/4"	3.450"
6"	6.625"	0.135"	1/4"	5.575"
8"	8.625"	0.135"	1/4"	7.575"
12"	12.750"	0.135"	5/16"	11.572"
14"	14.000"	0.156"	5/16"	12.783"
16"	16.000"	0.179"	5/16"	14.737"
18"	18.000"	0.219"	5/16"	16.657"
20"	20.000"	0.219"	5/16"	18.657"
24"	24.000"	0.250"	3/8"	22.470"
30"	30.000"	0.250"	3/8"	28.470"
36"	36.000"	0.250"	3/8"	34.470"

NOTES:

1. PIPE CYLINDER, LINING, & COATING SHALL CONFORM TO THE REQUIREMENTS OF MMWD SPECIFICATIONS FOR MANUFACTURE OF MORTAR LINED STEEL PIPE.
2. OUT–OF–ROUNDNESS OF STEEL CYLINDER SHALL NOT BE GREATER THAN 1/8" MEASURED AS THE DISTANCE BETWEEN MAJOR AND MINOR OUTSIDE DIAMETERS.
3. "CLEAN" AREAS SHALL BE FREE OF ALL COATING MATERIALS OR SHALL BE TAPED FOR EASY STRIPPING IN THE FIELD TO CLEAN BARE STEEL.
4. THE PIPE SHALL BE MARKED LONGITUDINALLY OR SPIRALLY, AS FOLLOWS:
   "PIPE SIZE" MMWater "CONTRACT NO." "LINING TYPE" "COATING TYPE" "COATING DATE" "WALL THICKNESS" "MINIMUM YIELD STRENGTH".
   EXAMPLE: 8.625 MMWater 1189ML–TC50 AUG 1998 – t=0.135" – Y=36KSI
   THE LETTERING SHALL BE OF A HEIGHT NOT LESS THAN 1/4" NOR GREATER THAN 2 INCHES REPEATED CONTINUOUSLY FOR THE LENGTH OF THE PIPE.

MORTAR LINED & TAPE COATED 4" TO 36" STEEL PIPE

NO SCALE	FILE NO. SD0025	APPROV. BY: KMcD	REV. DATE: 12–05–11

Back to page 1

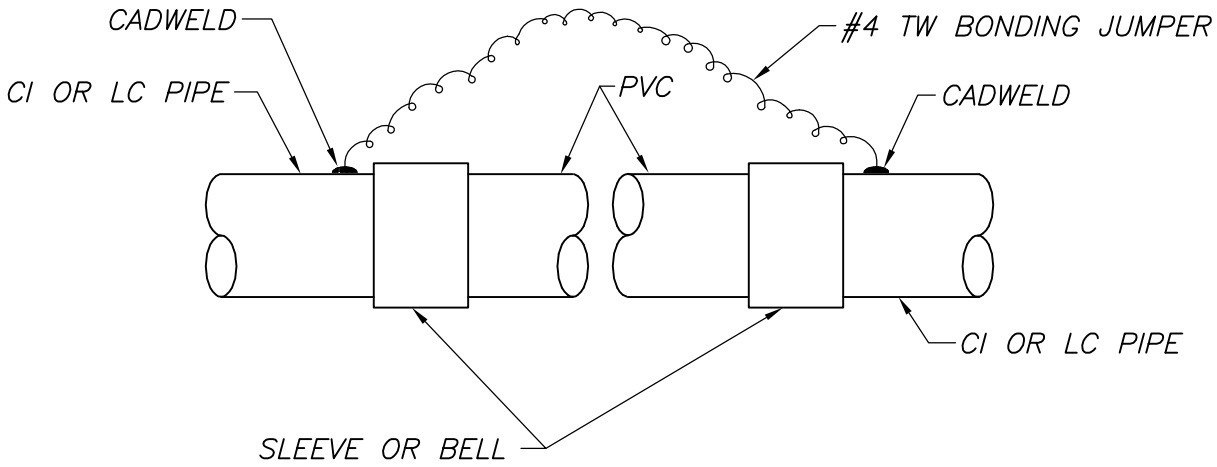

CONTINUITY JUMPER WIRE

NO SCALE	FILE NO. SD0026	APPROV. BY: RKT	REV. DATE: 5-12-95

Back to page 1

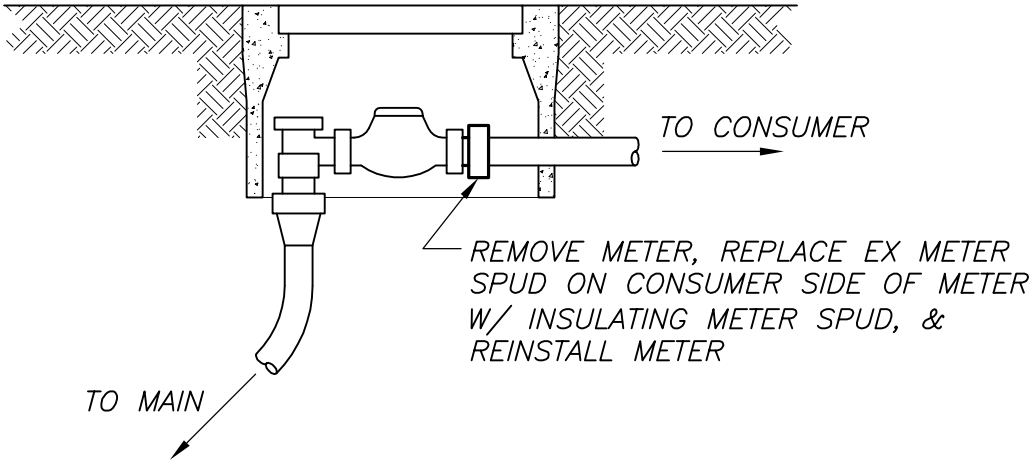

METER WITH ANGLE STOP

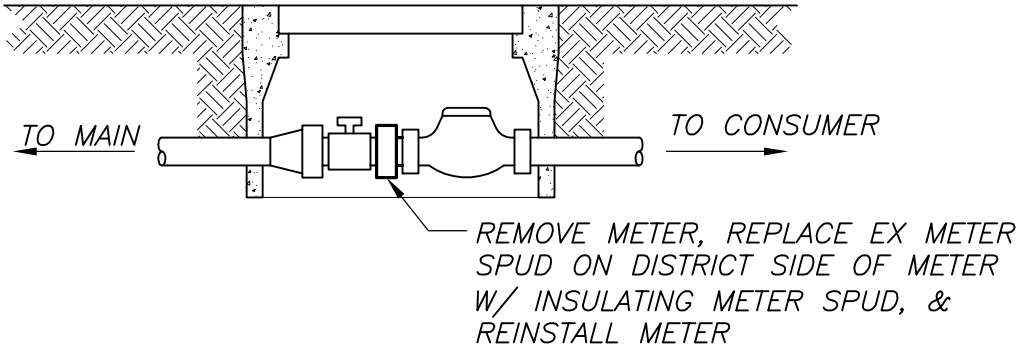

METER WITH STRAIGHT STOP

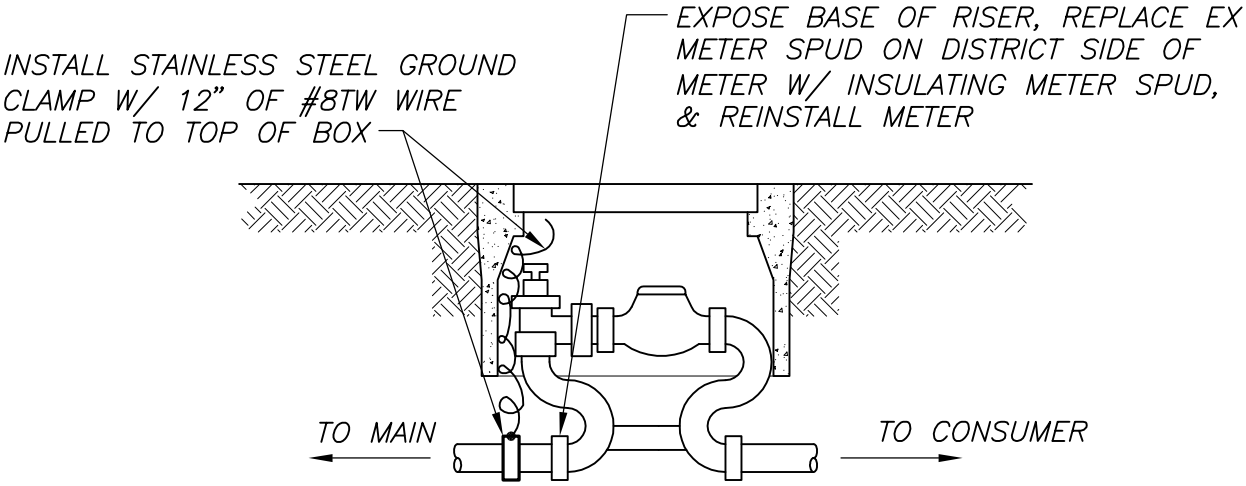

METER WITH RISER

3/4" & 1" METER INSULATION DETAIL

NO SCALE	FILE NO. SD0027	APPROV. BY: RKT	REV. DATE: 3/16/00

Back to page 1

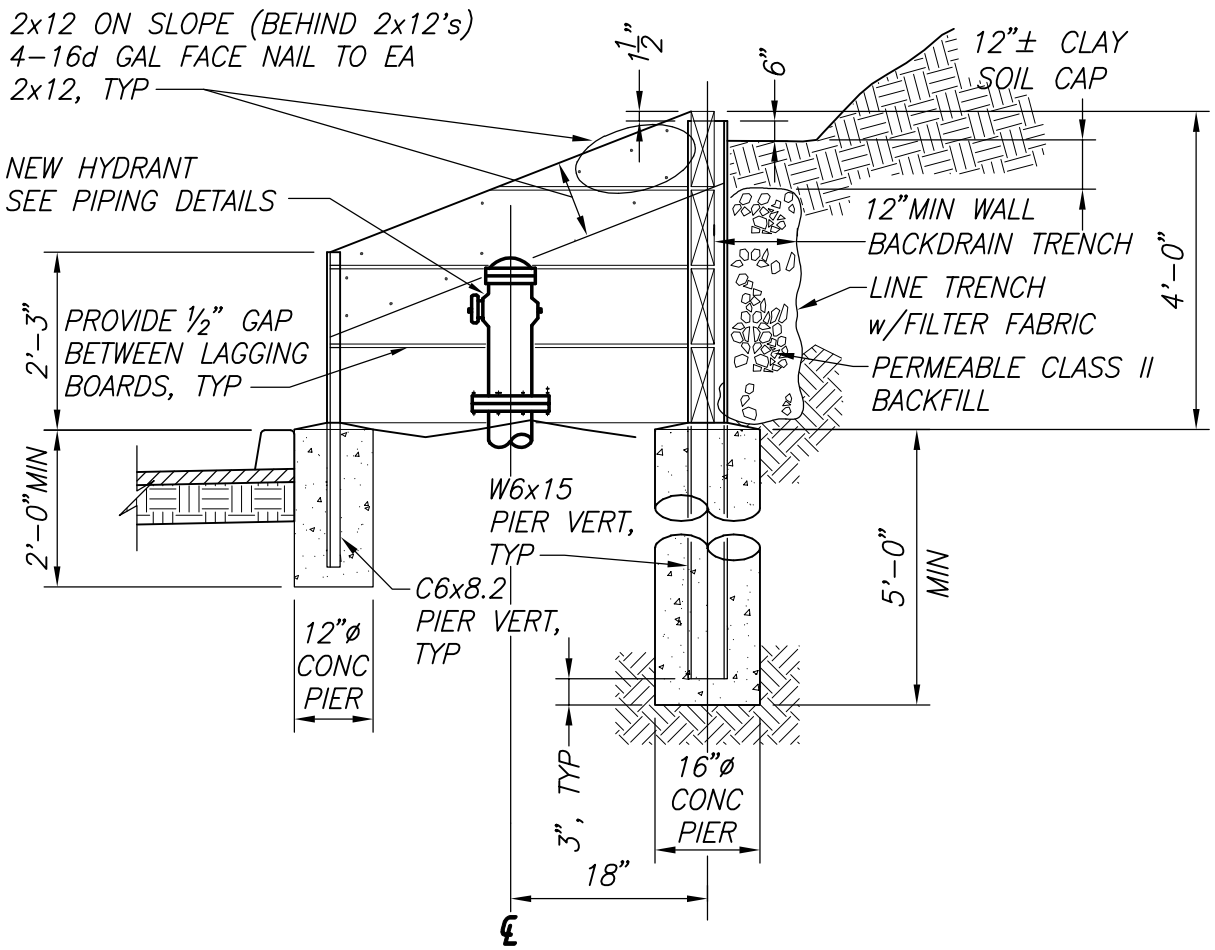

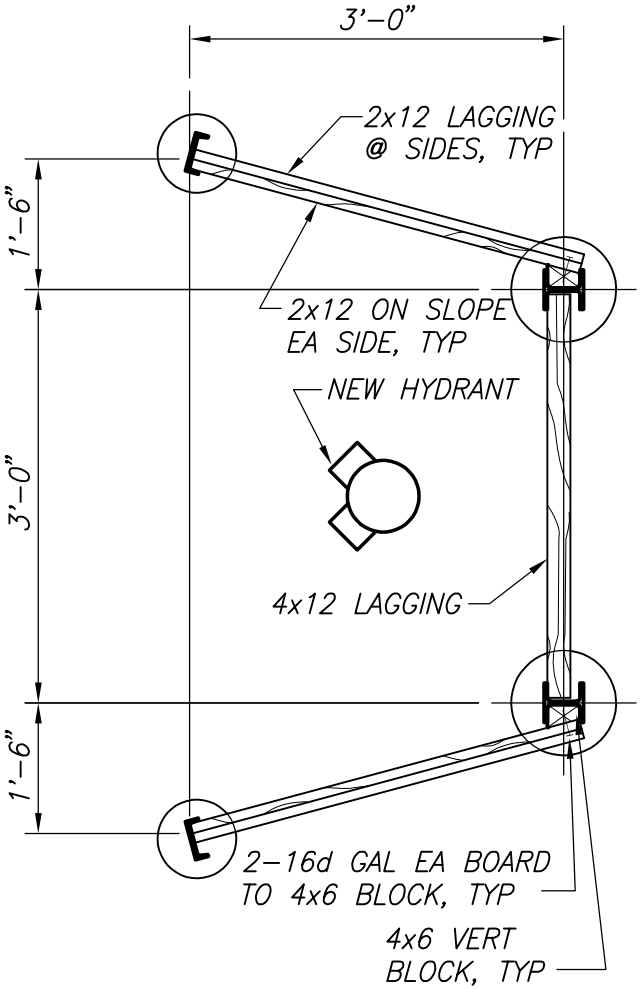

PLAN

NOTES:

1. ALL WOOD SHALL BE PRESSURE PRESERVATIVE TREATED (0.6 LBS/FT. ACQ), NO. 1 DOUGLAS FIR.
2. EXPOSED STEEL PIER VERTICALS SHALL BE COATED W/SYSTEM 8 COATING AS FOLLOWS: PRIMER: DIRECT TO METAL CORROSION INHIBITING ACRYLIC PRIMER 3-4 MIL DRY FILM THICKNESS (DFT): SHERWIN WILLIAMS DTM ACRYLIC PRIMER/FINISH OR DISTRICT APPROVED EQUAL INTERMEDIATE AND FINISH COATS - ACRYLIC LATEX 2-3 MIL DFT EACH COAT: SHERWIN WILLIAMS DTM ACRYLIC PRIMER/FINISH OR DISTRICT APPROVED EQUAL. FINISH COLOR TO MATCH TNEMEC COLOR 112GN FOLIAGE.TOTAL SYSTEM THICKNESS 7-10 MIL DFT
3. f'c = 3000 psi

WOOD BULKHEAD WALL

SCALE: 1/2"=1'	FILE NO. SD0028	APPROV. BY: EI	REV. DATE: MAY '19

NOTES:

1. CONSUMER SHALL MARK LOCATION FOR PROPOSED ASSEMBLY FOR MMWD REVIEW & APPROVAL. ALL MMWD PIPING MUST BE IN THE PUBLIC EASEMENT. ASSEMBLY SHALL HAVE 12" CLEAR ALL AROUND. METER SHALL BE IN ACCESSIBLE LOCATION.
2. CONSUMER FURNISHED APPROVED BACKFLOW ASSEMBLY MUST BE ON SITE FOR MMWD INSPECTION PRIOR TO ANY MMWD PIPING INSTALLATION.
3. WRAP ALL BARE METAL BELOW GROUND.
4. CHLORINATE & TEST PRIOR TO CONNECTION.
5. TEST CORROSION SYSTEM PRIOR TO CONNECTION.
6. HOT TAP OF EX MAIN TO BE COORDINATED WITH MMWD.
7. MMWD WILL NOT TURN ON FIRELINE UNTIL FINAL PAVING & SIDEWALKS ARE COMPLETE.

MMWD FURNISHED MATERIAL

1. HDPE SPOOL KIT. SEE TORQUE SPEC.
2. SLIP-ON FLANGE
3. WELDED STEEL PIPE
4. GATE VALVE
5. TAPPING SLEEVE, TEE OR WELDED OUTLET
6. FLANGE INSULATING KIT
7. 5"ØALUMINUM TUBING
8. CI VALVE CAP
9. B9 METER BOX
10. #8 THWN STANDARD COPPER WIRE
11. #S8S SPLIT BOLT CONNECTOR
12. 32# MAGNESIUM ANODE WITH PACKAGED BACKFILL W/ WIRE.
13. 2 PIECE PHENOLIC TERMINAL BLOCK
14. OWNED AND MAINTAINED BY MMWD. ALL MATERIAL FURNISHED BY MMWD. RENEW, EXTENT OF WORK

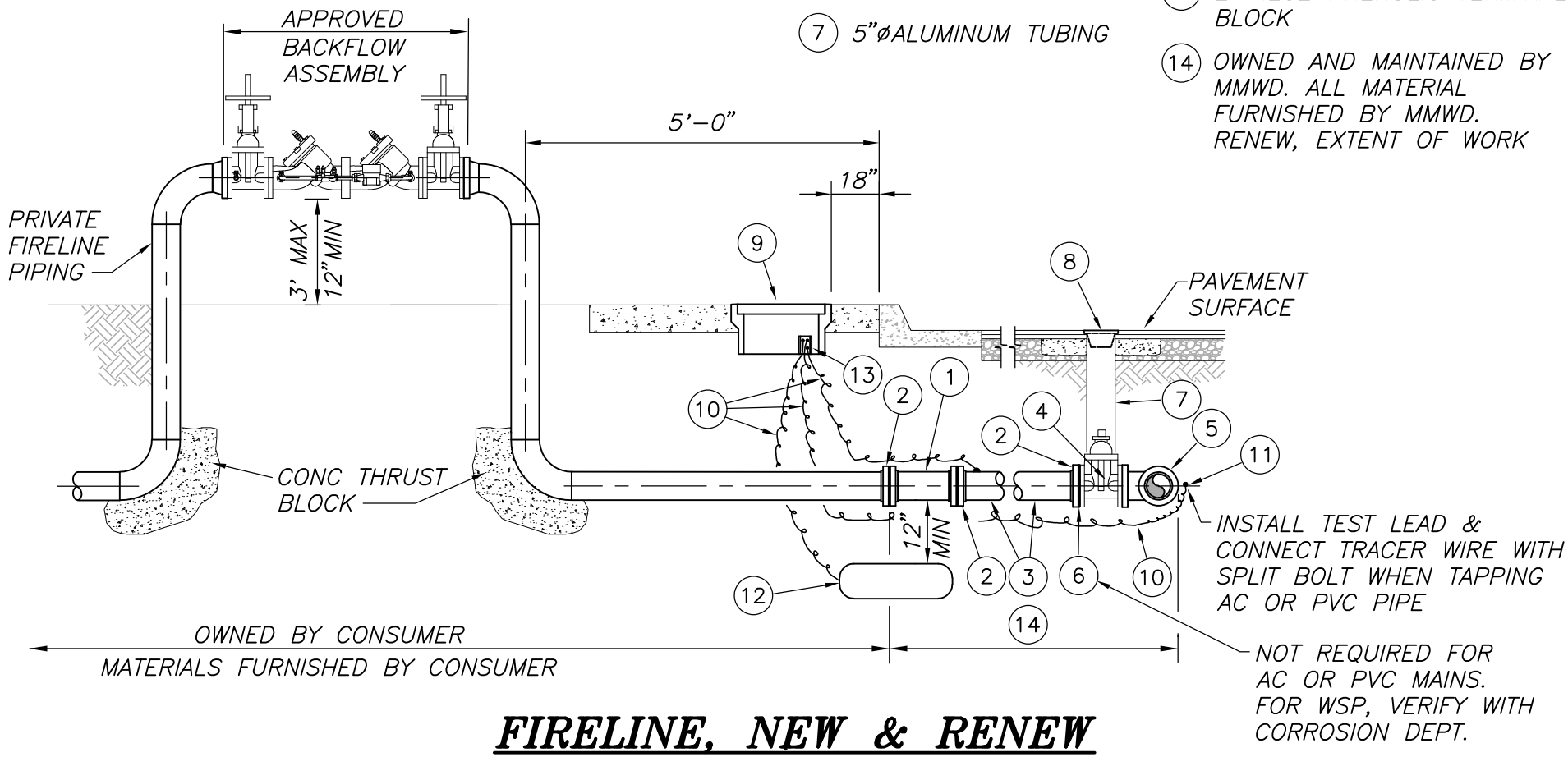

FIRELINE, NEW & RENEW

NO SCALE	FILE NO. SD0029	APPROV. BY: EI	REV. DATE: FEB '18

Back to page 1

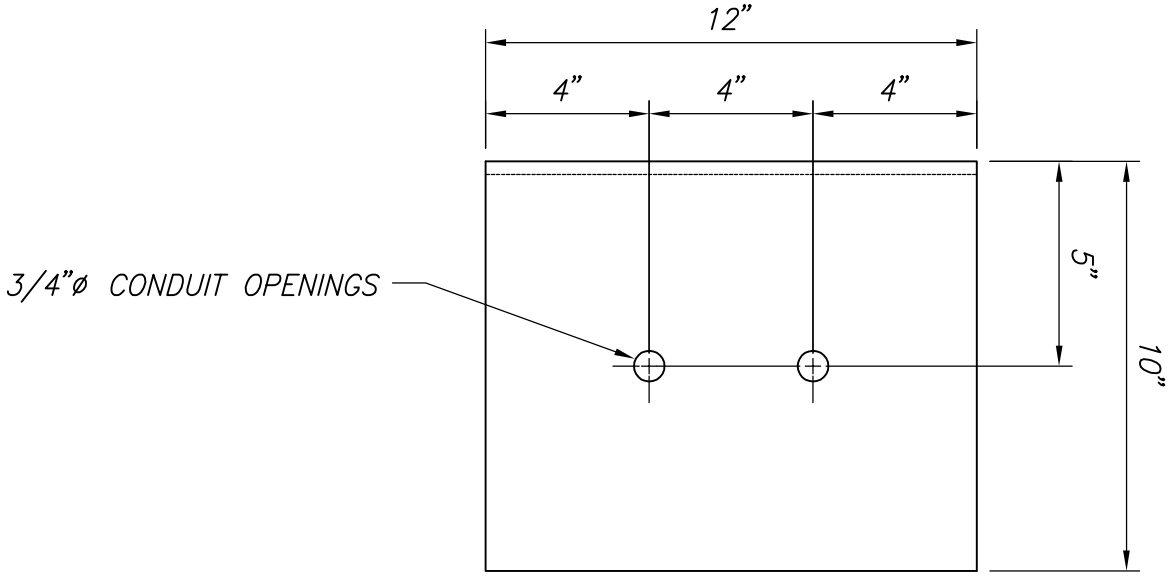

TOP VIEW

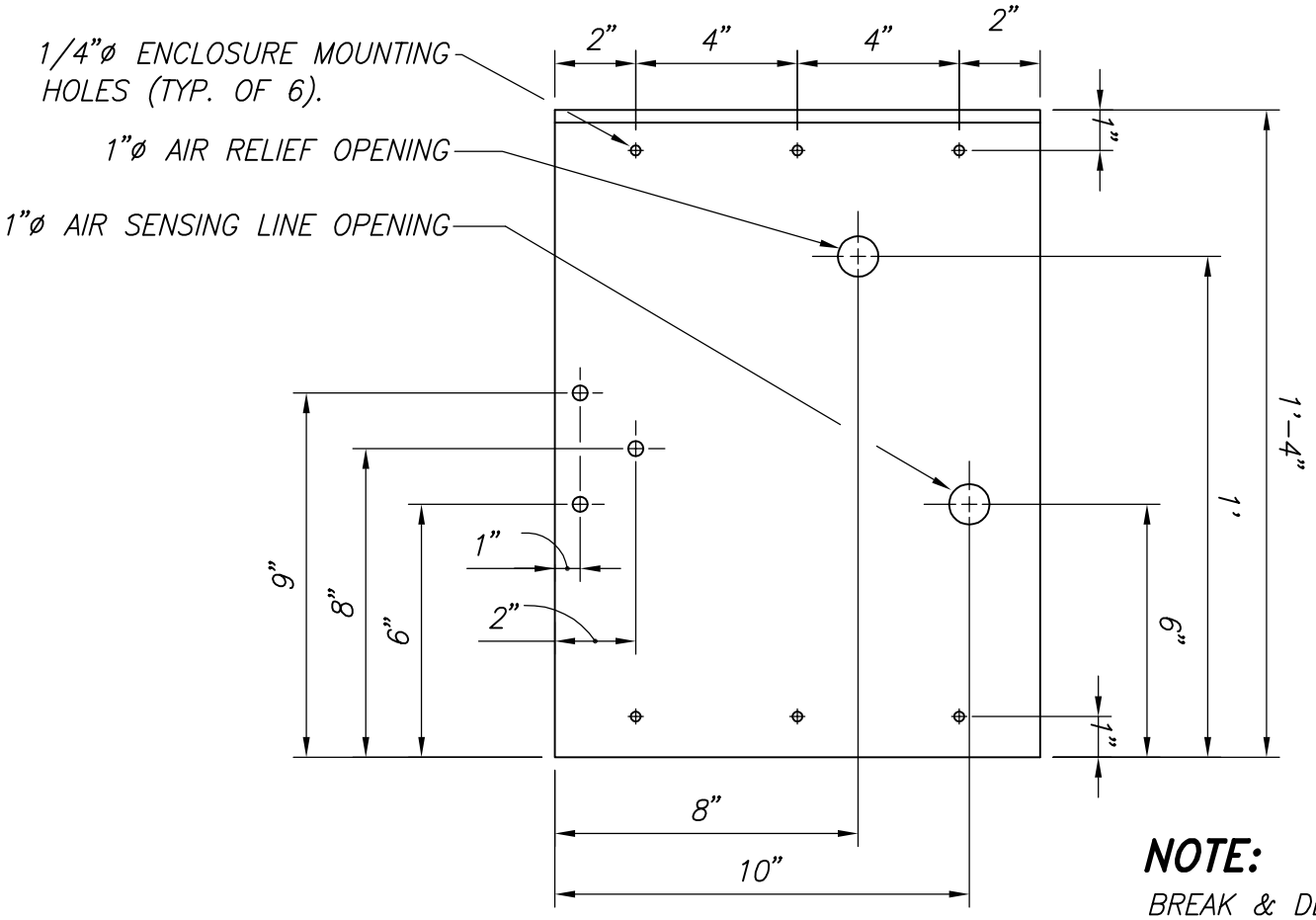

NOTE:
BREAK & DEBURR ALL SHARP EDGES.

FRONT INSIDE VIEW

LEVEL TRANSMITTER ENCLOSURE MOUNTING PLATE COVER

SCALE: 3"=1'-0"	FILE NO. SD0030	APPROV. BY: RKT	REV. DATE: 5-12-95

Back to page 1

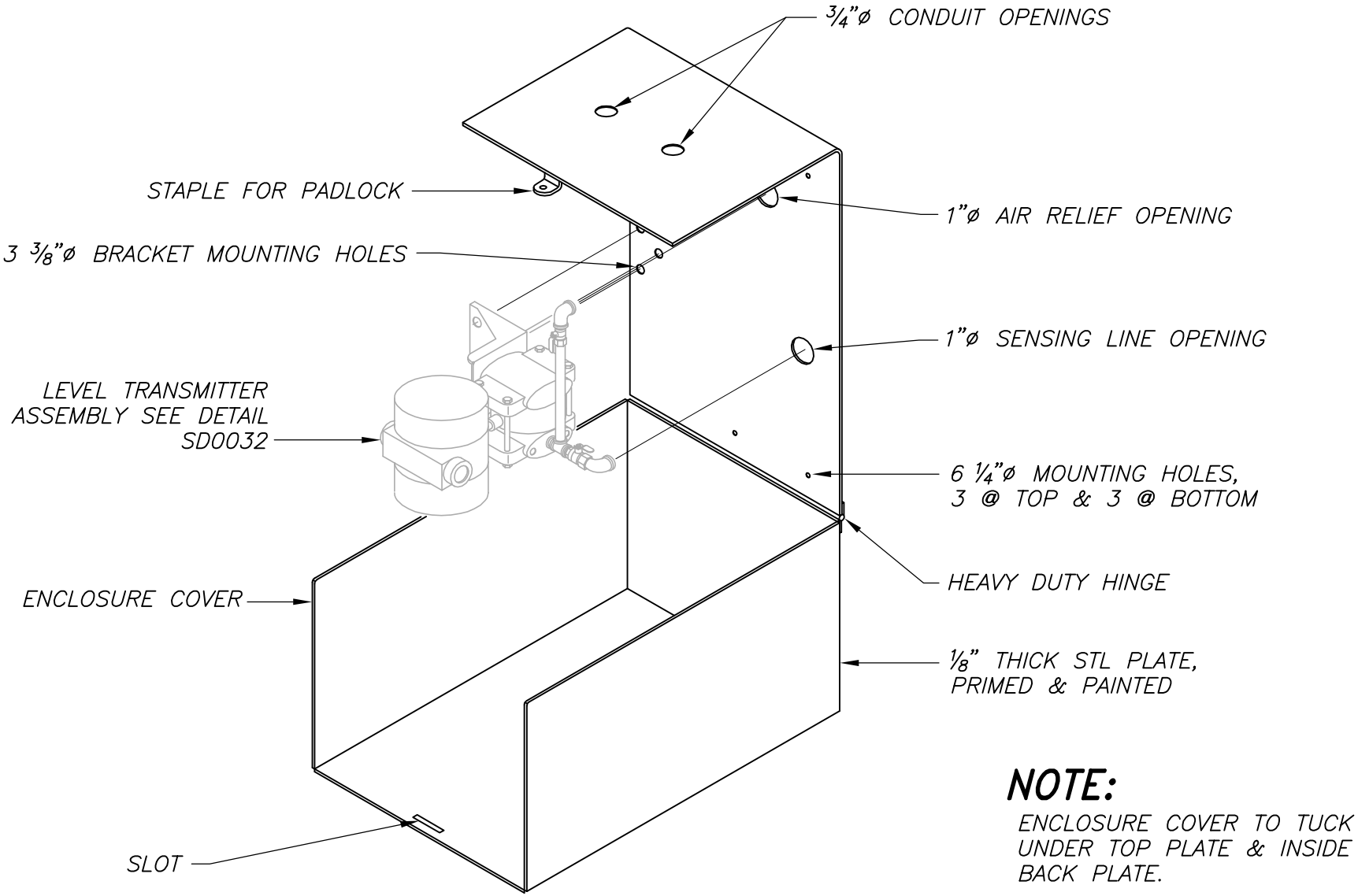

NOTE:

ENCLOSURE COVER TO TUCK UNDER TOP PLATE & INSIDE BACK PLATE.

LEVEL TRANSMITTER ENCLOSURE

NO SCALE	FILE NO. SD0031	APPROV. BY: RKT	REV. DATE: 8-4-04

Back to page 1

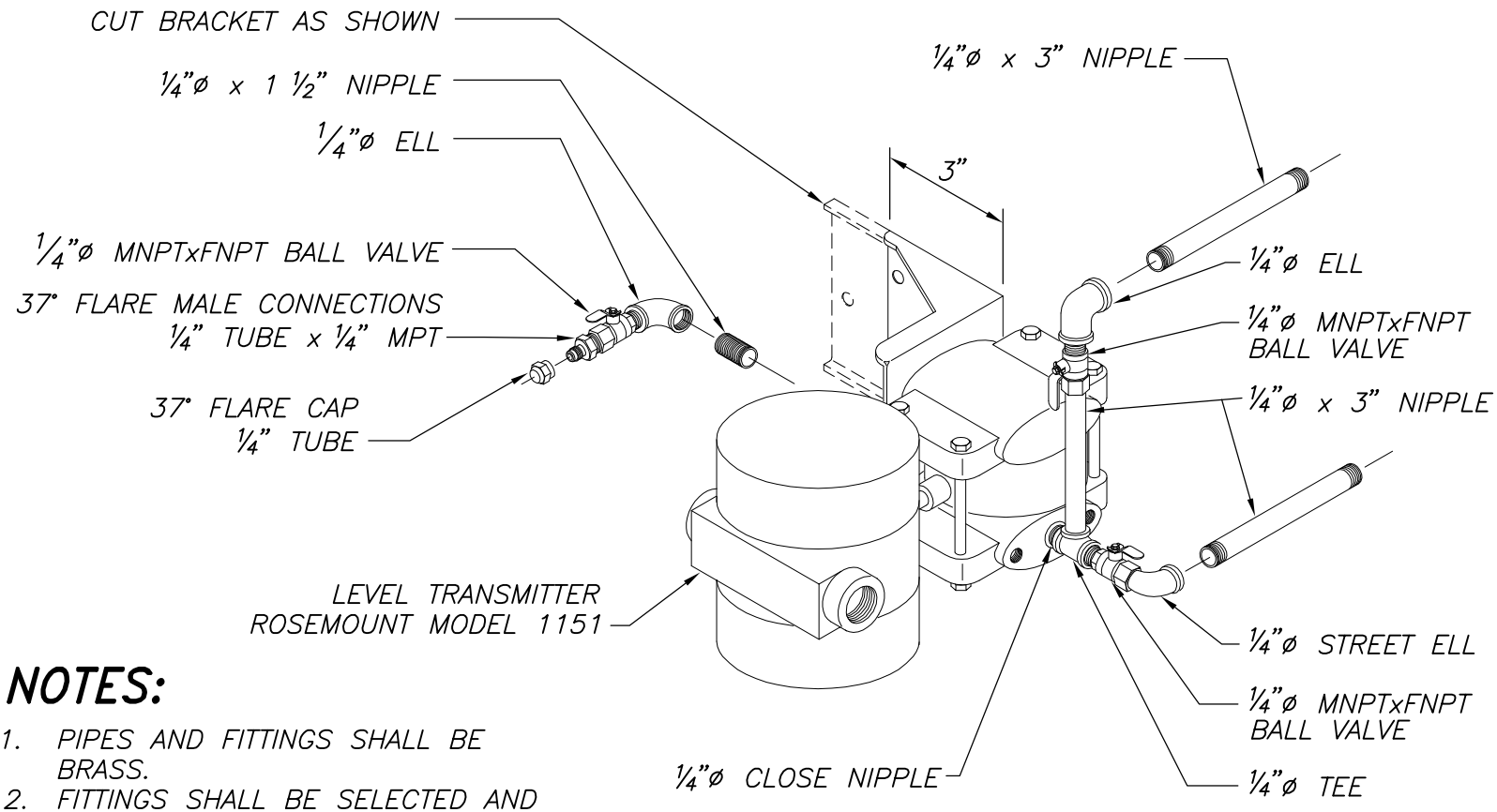

NOTES:

1. PIPES AND FITTINGS SHALL BE BRASS.
2. FITTINGS SHALL BE SELECTED AND ASSEMBLED TO MATCH HOLES IN TRANSMITTER ENCLOSURE.

LEVEL TRANSMITTER ASSEMBLY PIPING

NO SCALE	FILE NO. SD0032	APPROV. BY: RKT	REV. DATE: 8–9–04

Back to page 1

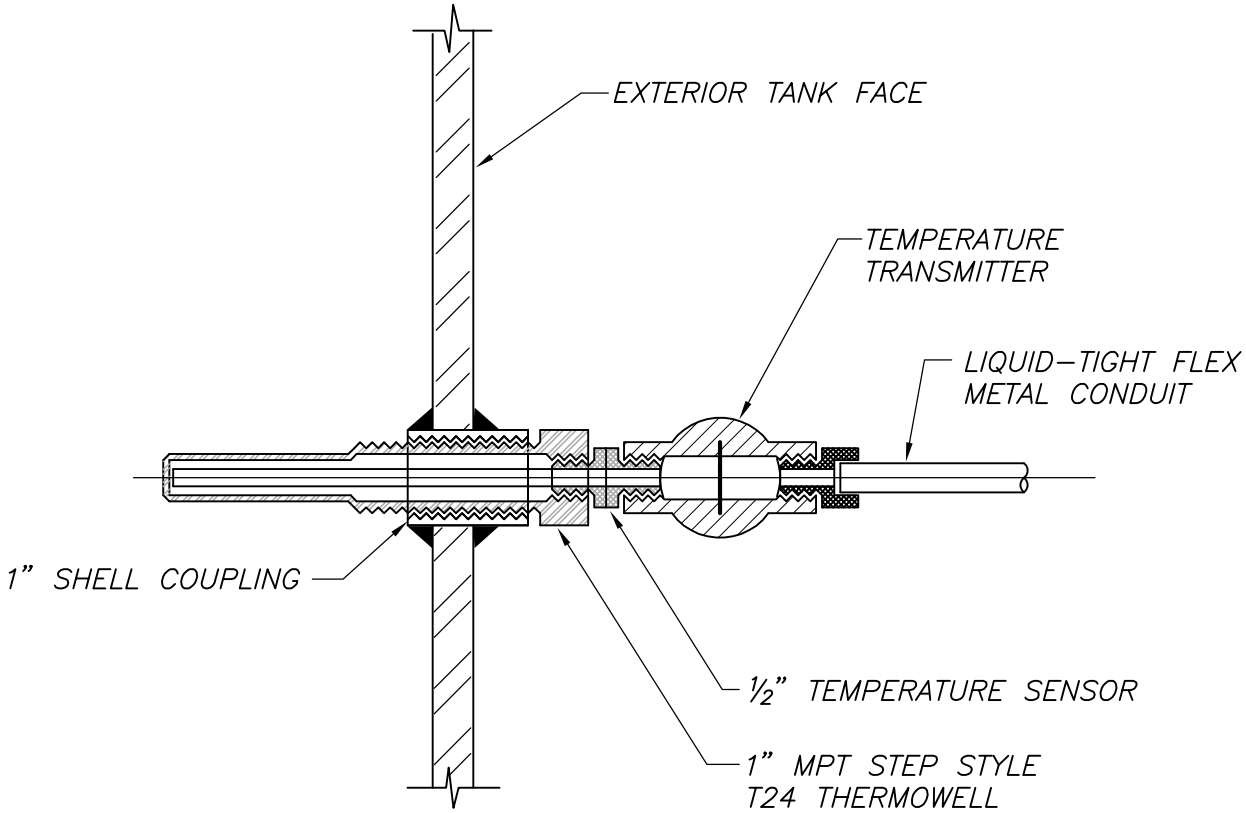

THERMOWELL ASSEMBLY

SCALE: NTS	FILE NO. SD0033	APPROV. BY: RKT	REV. DATE: 7–20–95

Back to page 1

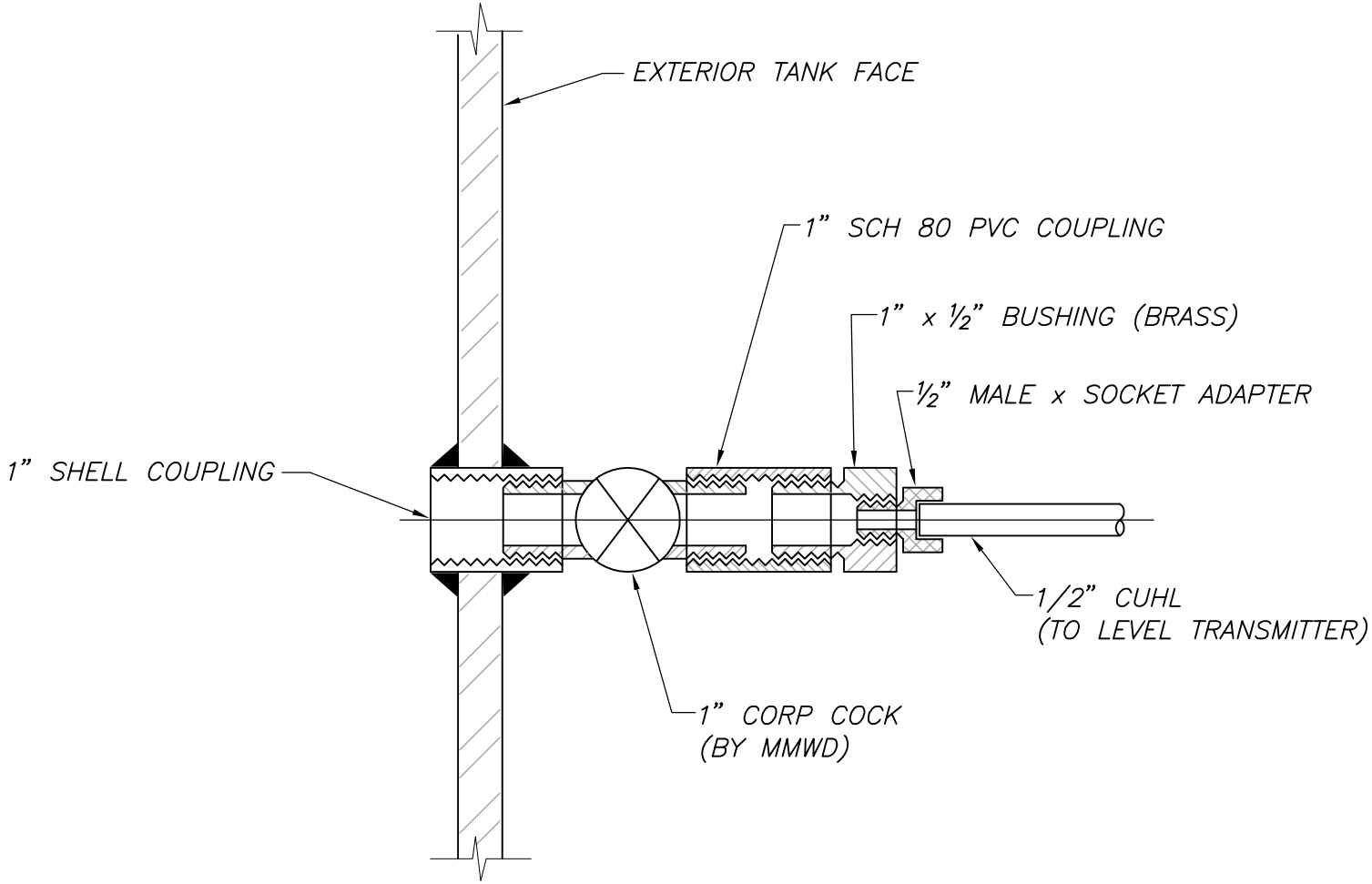

LEVEL TRANSMITTER ASSEMBLY

SCALE: NTS	FILE NO. SD0034	APPROV. BY: RKT	REV. DATE: 7-20-95

Back to page 1

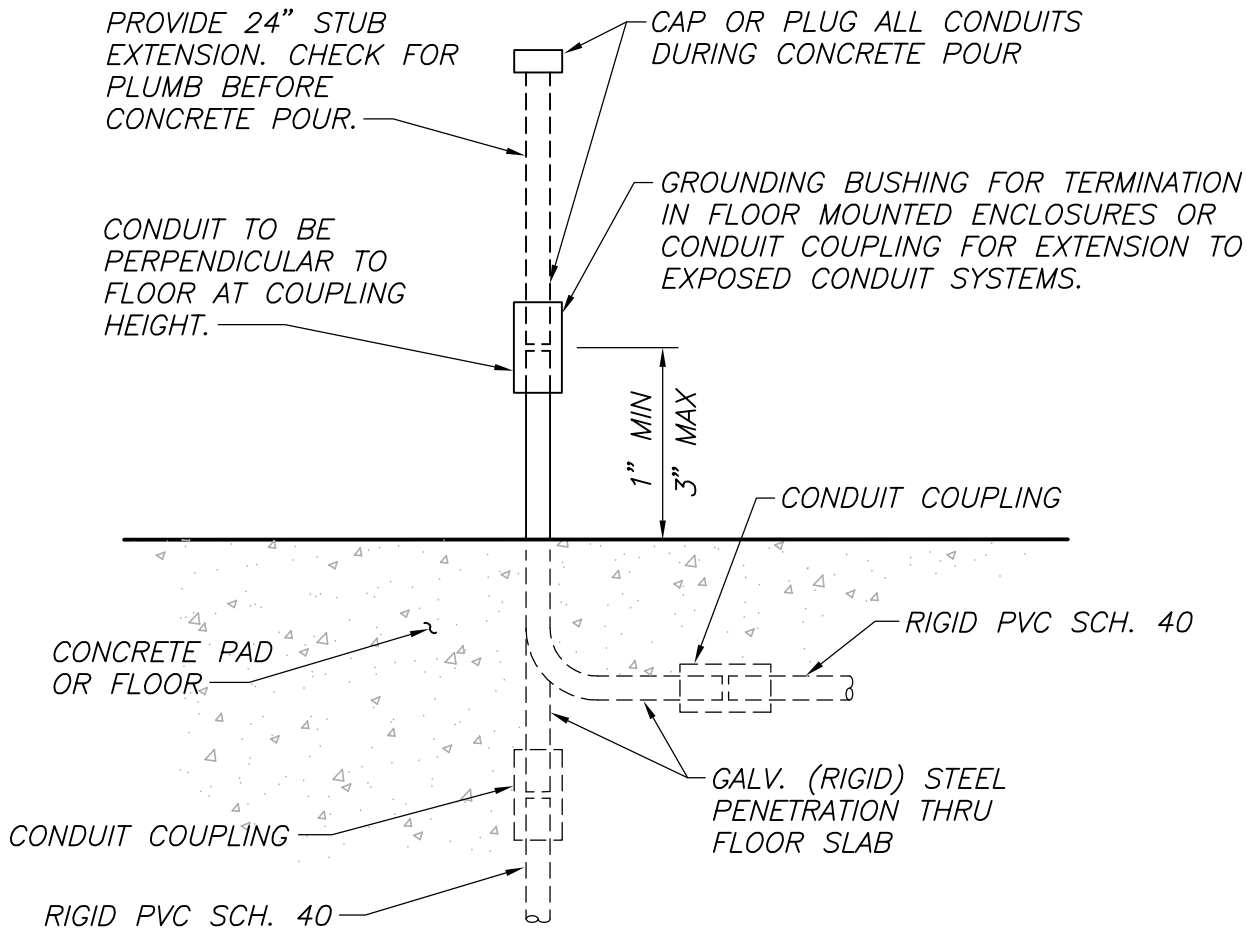

NOTE:

APPLICABLE IN ALL AREAS INCLUDING AREAS NOT PROTECTED BY A FLOOR MOUNTED ENCLOSURE.

CONDUIT STUB UP DETAIL

NO SCALE	FILE NO. SD0035	APPROV. BY: RKT	REV. DATE: 1-2-96

Back to page 1

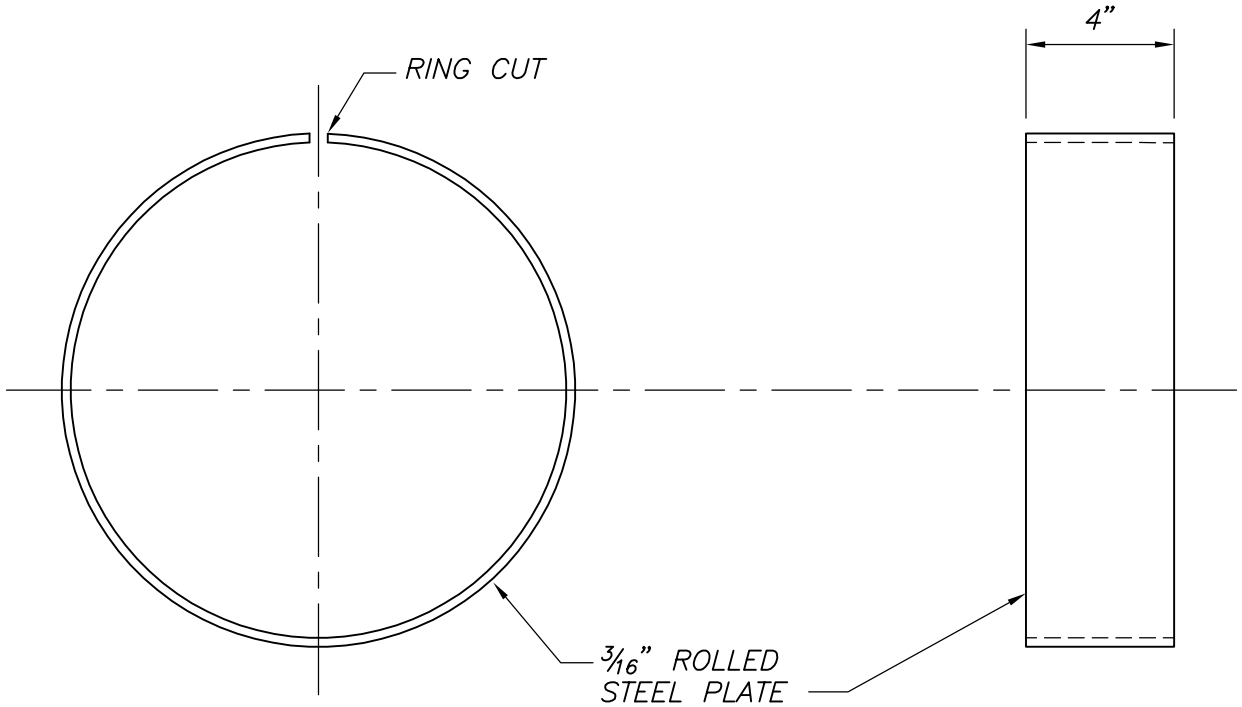

PIPE SIZE	INSIDE DIAMETER
4"	4.500"
6"	6.625"
8"	8.625"
10"	10.750"
12"	12.750"

STEEL BUTT STRAP

SCALE: NTS	FILE NO. SD0036	APPROV. BY:	REV. DATE:

Back to page 1

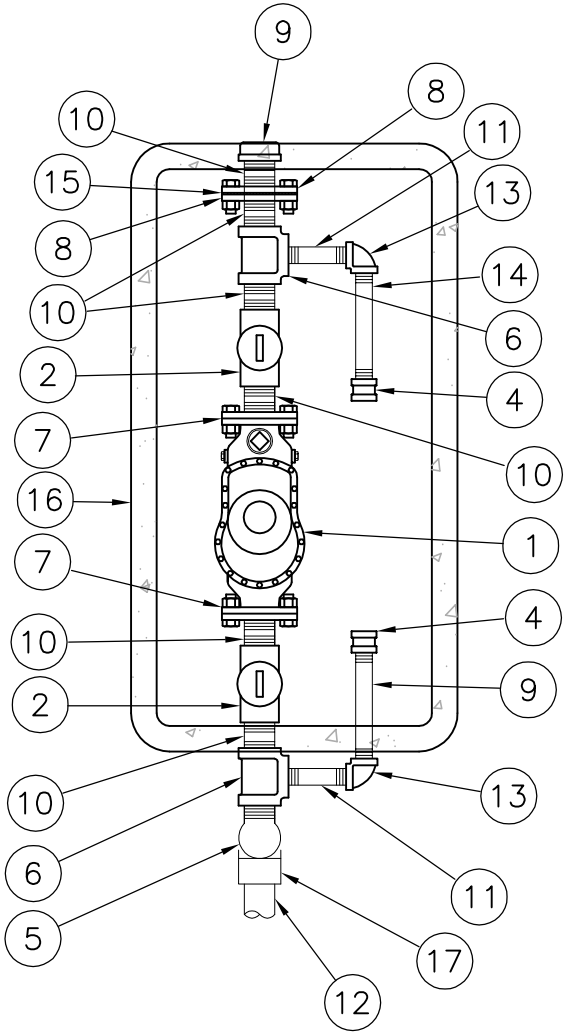

MATERIAL LIST

ITEM NUMBER	DESCRIPTION	NUMBER REQUIRED
1	2" METER	1
2	2" BALL COCKS (FEMALE X FEMALE)	2
3	2" CORPORATION COCK (H15023) NOT USED	
4	1 ½" STRAIGHT CURB COCK	2
5	2" COPPER X MALE 90° BEND	1
6	2" X 1 ½" THREADED BRASS TEE	2
7	2" METER FLANGE	2
8	2" THREADED FLANGE	2
9	2" THREADED CAP	1
10	2" THREADED BRASS NIPPLE (3" LONG)	6
11	1 ½" THREADED BRASS NIPPLE(6" LONG)	2
12	2" COPPER TUBING	
13	1 ½" THREADED BRASS ELBOW	2
14	1 ½" THREADED BRASS NIPPLE (8"LONG)	2
15	2" FLANGE INSULATING KIT	1
16	METER BOX AND STEEL COVER	1
17	2" COMP X COMP 90° BEND	1

NOTE:

1. PRIME AND WRAP ALL BARE METAL IN CONTACT WITH GROUND
2. INSTALL METER BOX 4" ABOVE FINISH GRADE IF IN PLANTER AREA.

2" DOMESTIC METER W/ BYPASS

NO SCALE	FILE NO. SD0037	APPROV. BY: JM	REV. DATE: MAY '08

Back to page 1

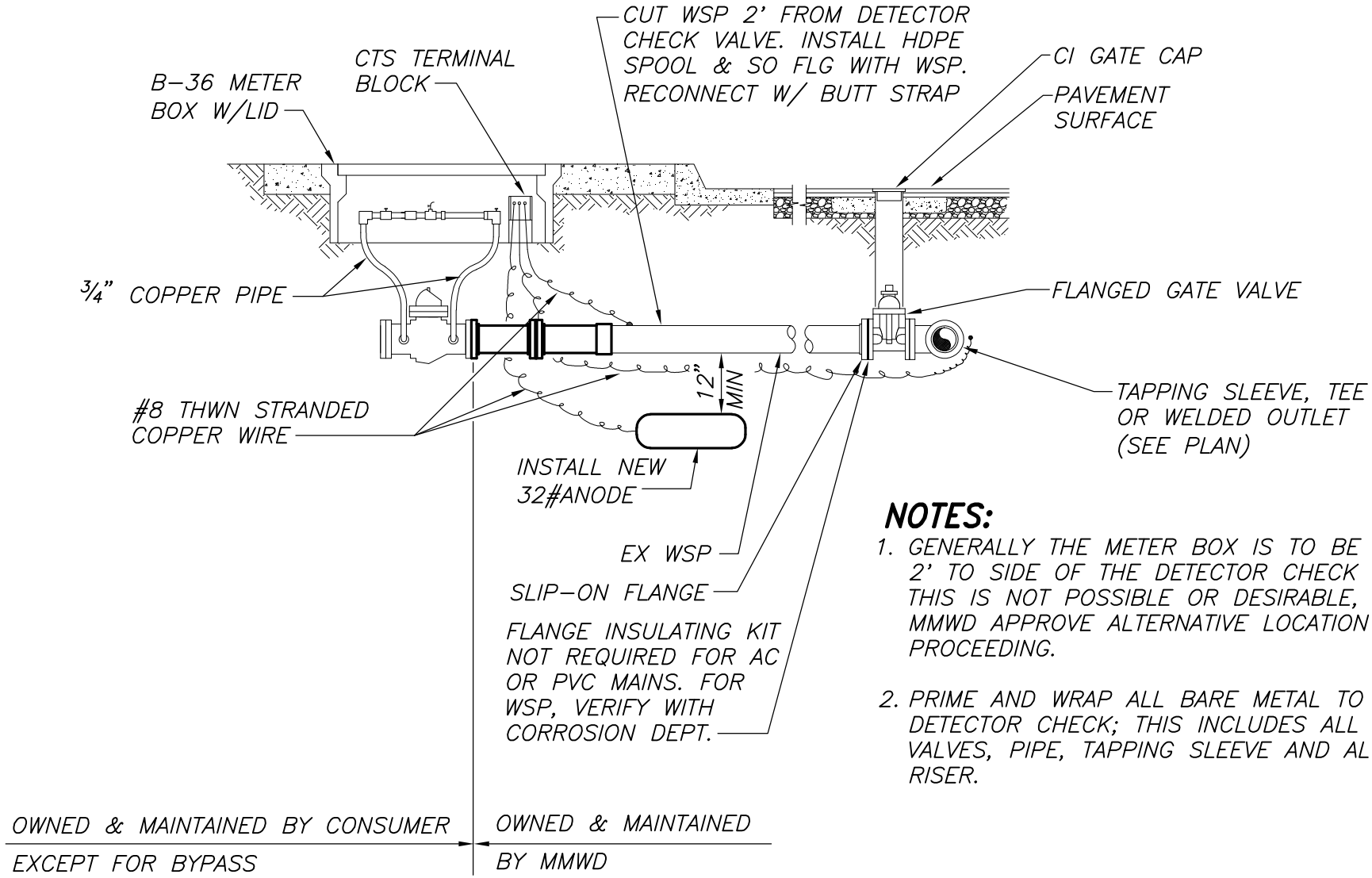

NOTES:

1. GENERALLY THE METER BOX IS TO BE LOCATED 2' TO SIDE OF THE DETECTOR CHECK VALVE; IF THIS IS NOT POSSIBLE OR DESIRABLE, HAVE MMWD APPROVE ALTERNATIVE LOCATION BEFORE PROCEEDING.

2. PRIME AND WRAP ALL BARE METAL TO DETECTOR CHECK; THIS INCLUDES ALL FITTINGS, VALVES, PIPE, TAPPING SLEEVE AND ALUM VALVE RISER.

FIRELINE, INSULATION RETROFIT

NO SCALE	FILE NO. SD0038	APPROV. BY: EI	REV. DATE: FEB '18

Back to page 1

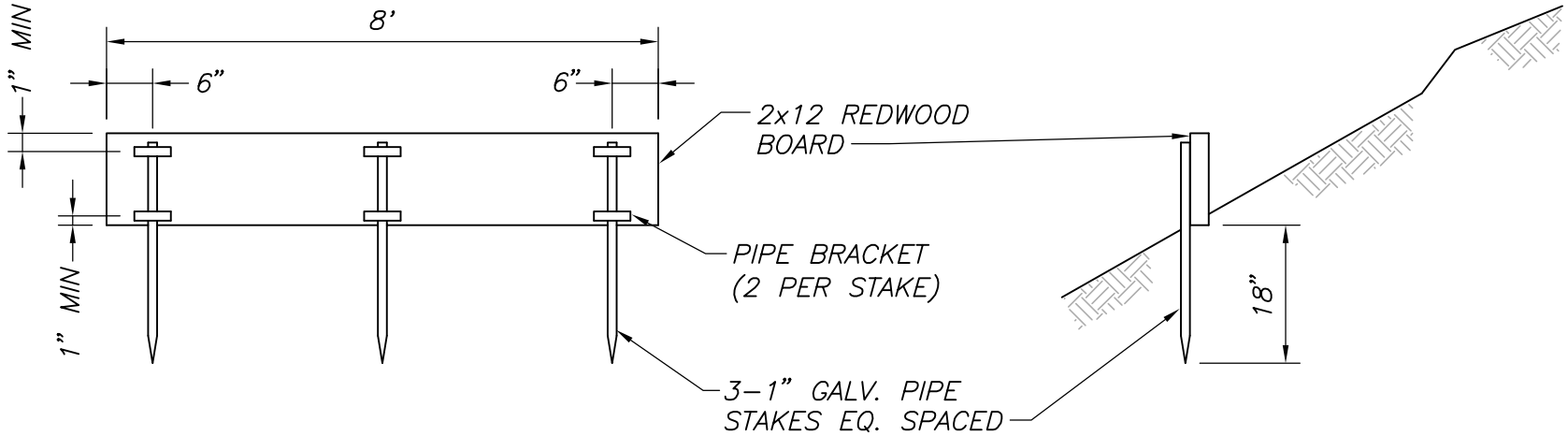

NOTE:

EROSION CONTROL BOARDS SHALL BE INSTALLED @ 10'-0" O.C. IN R/W.

EROSION CONTROL BOARD

NO SCALE	FILE NO. SD0039	APPROV. BY: RKT	REV. DATE: 5-12-95

Back to page 1

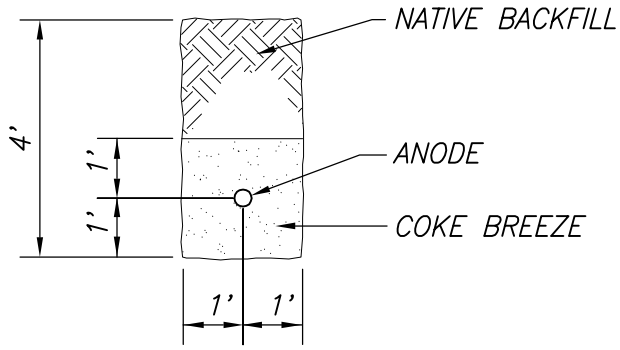

SECTION A

SCALE: 3/8"=1'

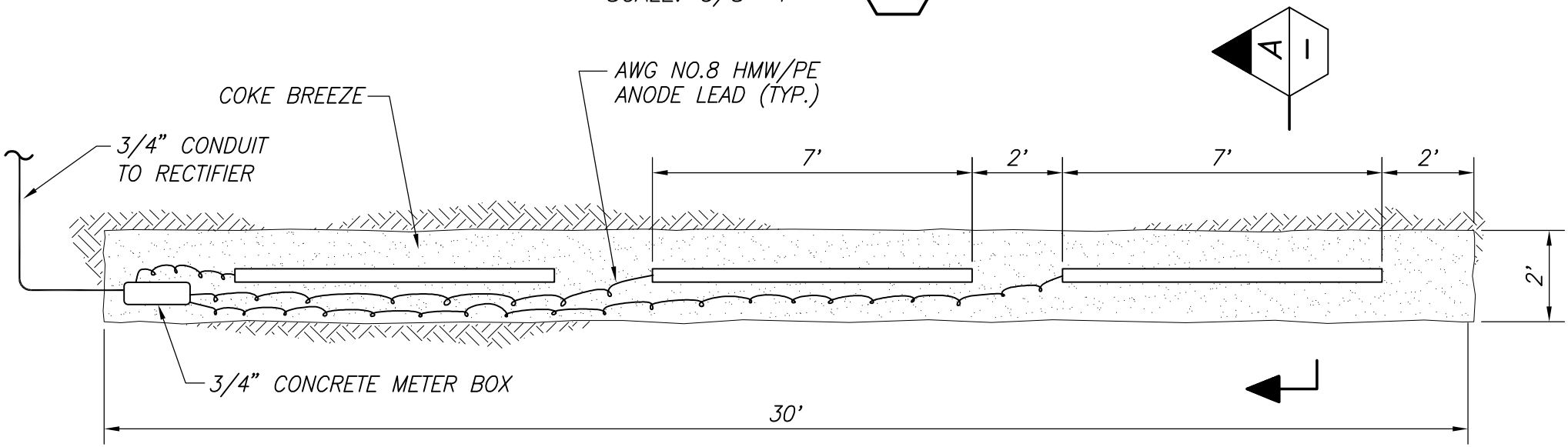

IMPRESSED CURRENT HORIZONTAL GROUND BED

PLAN

SCALE: 3/8"=1'

SCALE: AS SHOWN	FILE NO. SD0040	APPROV. BY: RKT	REV. DATE: 5-12-95

Back to page 1

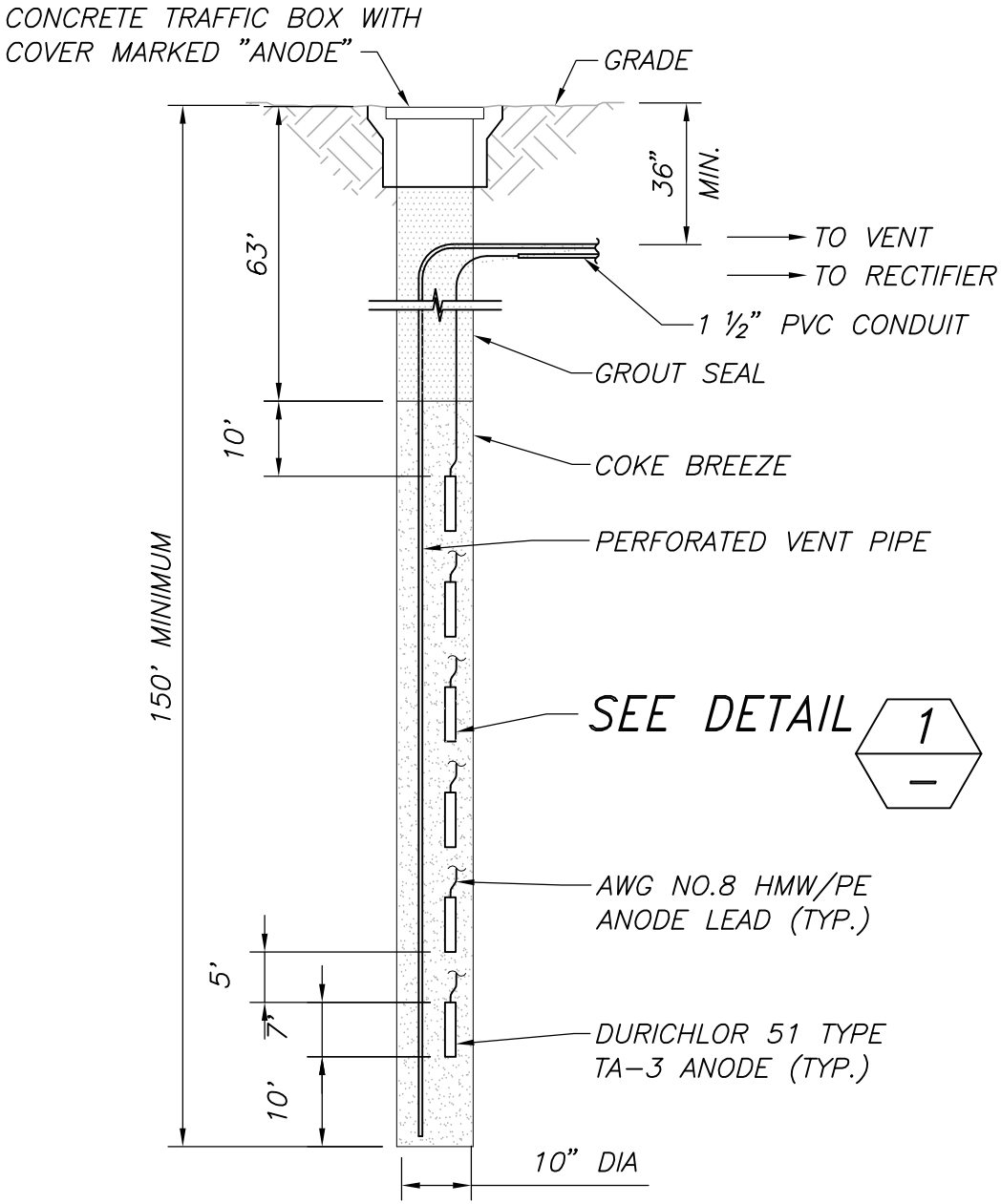

IMPRESSED CURRENT
DEEP WELL GROUND BED

ELEVATION

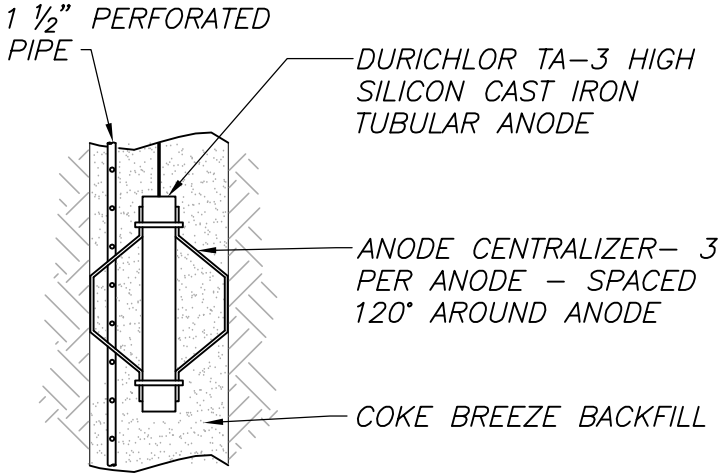

DETAIL 1

SCALE: NTS

DEEP WELL GROUND BED

NO SCALE	FILE NO. SD0041	APPROV. BY: RKT	REV. DATE: 3-27-98

Back to page 1

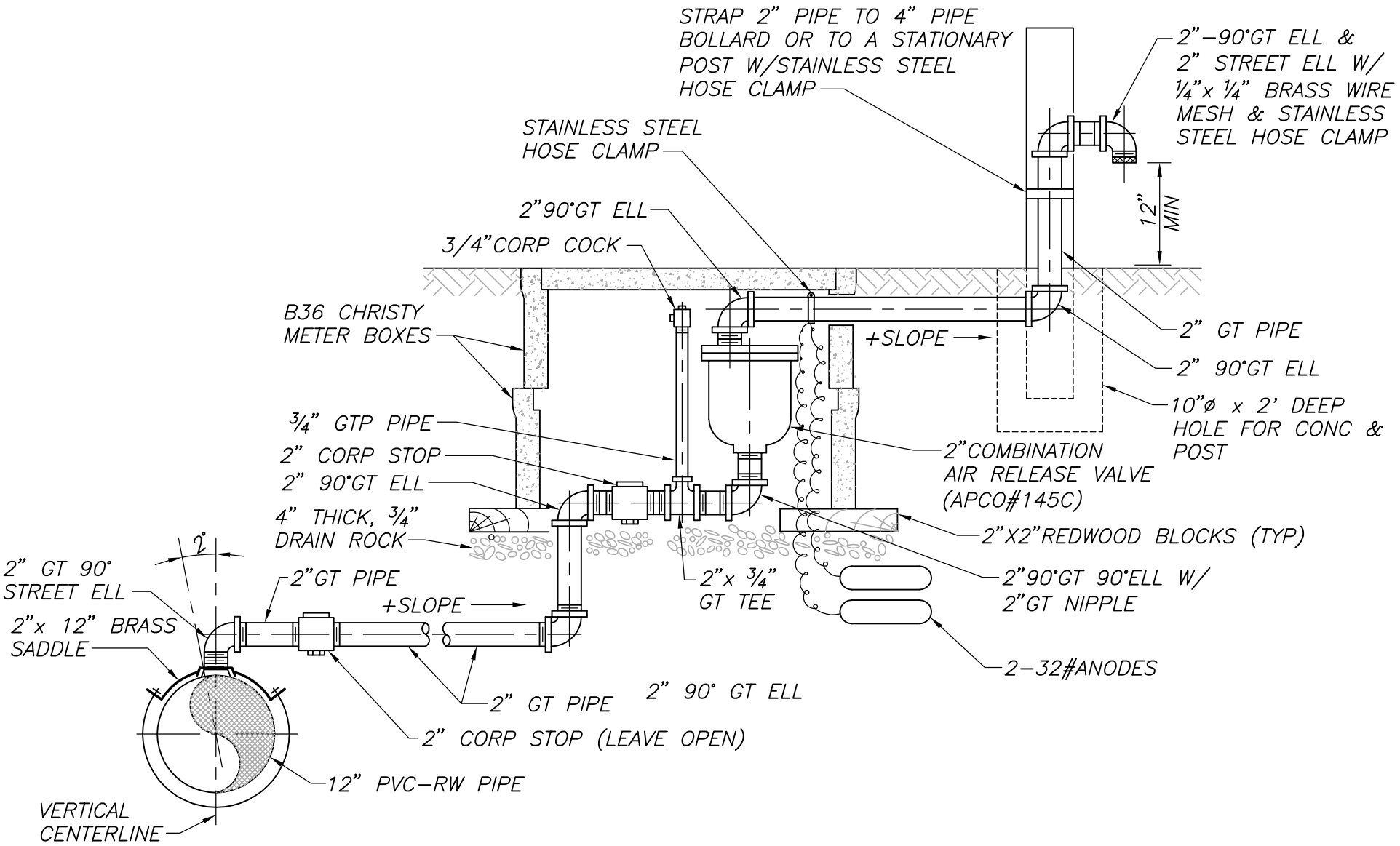

TYPICAL AIR/VACUUM RELEASE VALVE

NO SCALE	FILE NO. SD0042	APPROV. BY: RKT	REV. DATE: 5–12–95

Back to page 1

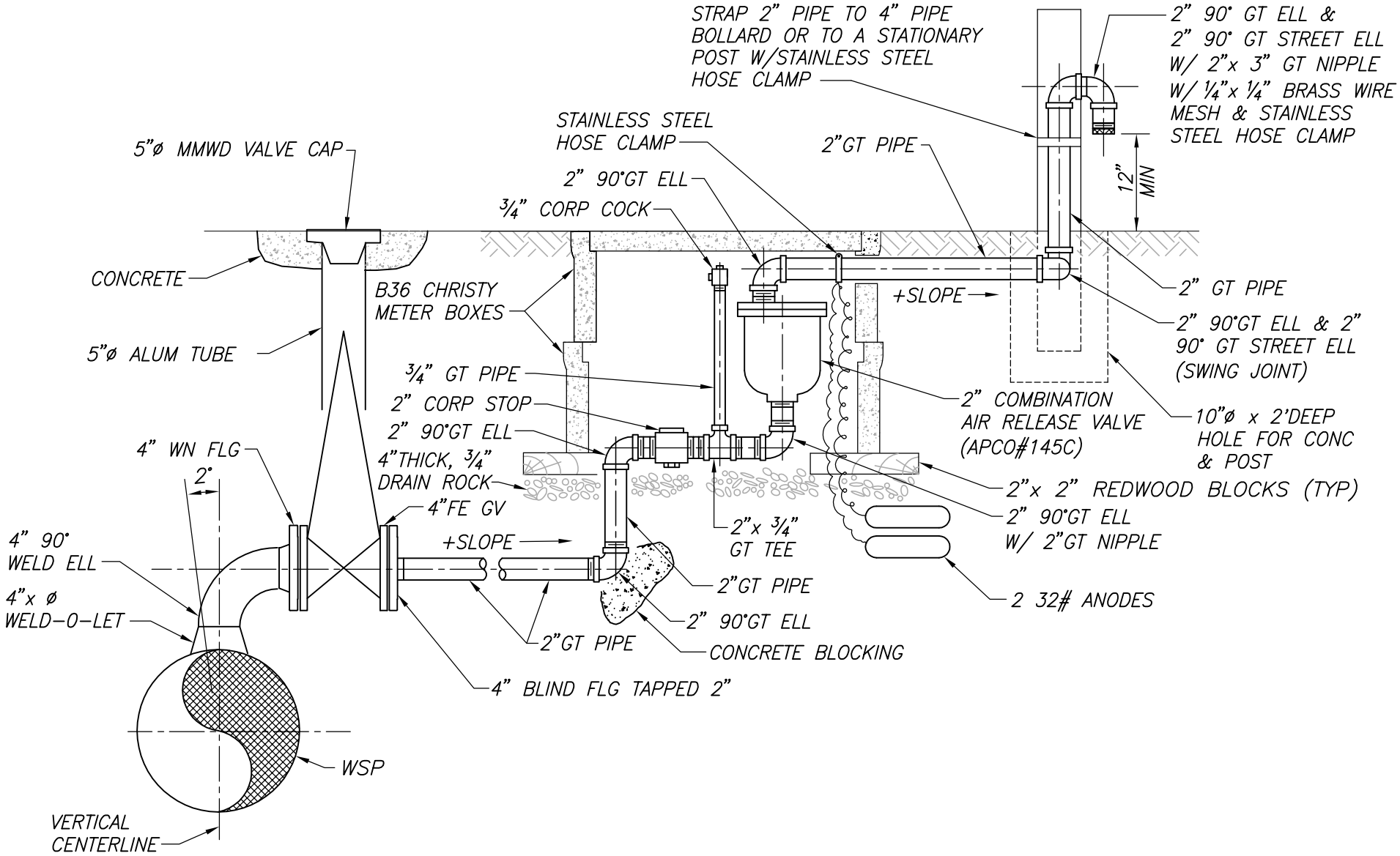

COMBINATION AIR/RELEASE VALVE

NO SCALE	FILE NO. SD0044	APPROV. BY: KMcD	REV. DATE: 3/11/10

Back to page 1

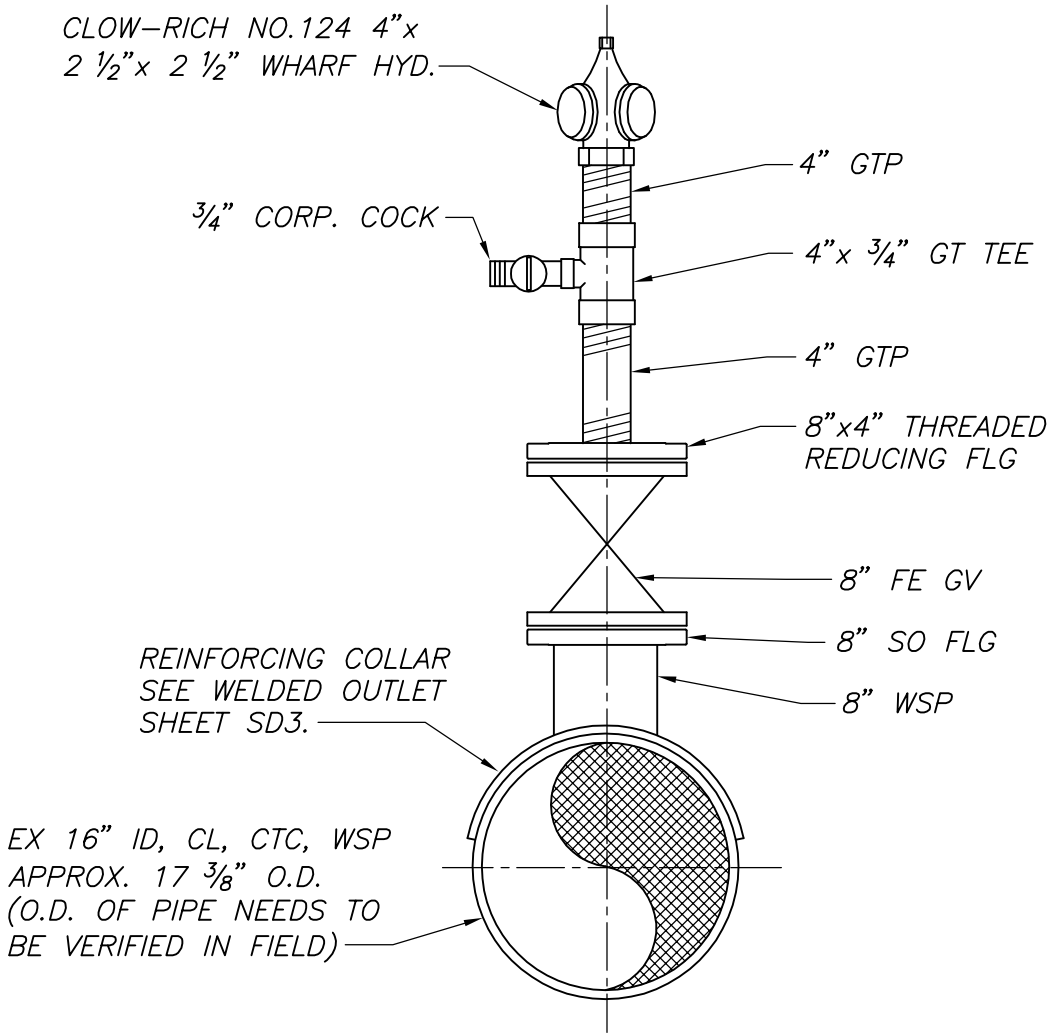

(1 REQ'D – REINFORCING COLLAR SUPPLIED BY CONTRACTOR
ALL OTHER MATERIAL IN THIS DETAIL SUPPLIED BY MMWD)

WHARF HYD DRAIN

NO SCALE	FILE NO. SD0045	APPROV. BY: RKT	REV. DATE: 5–12–95

Back to page 1

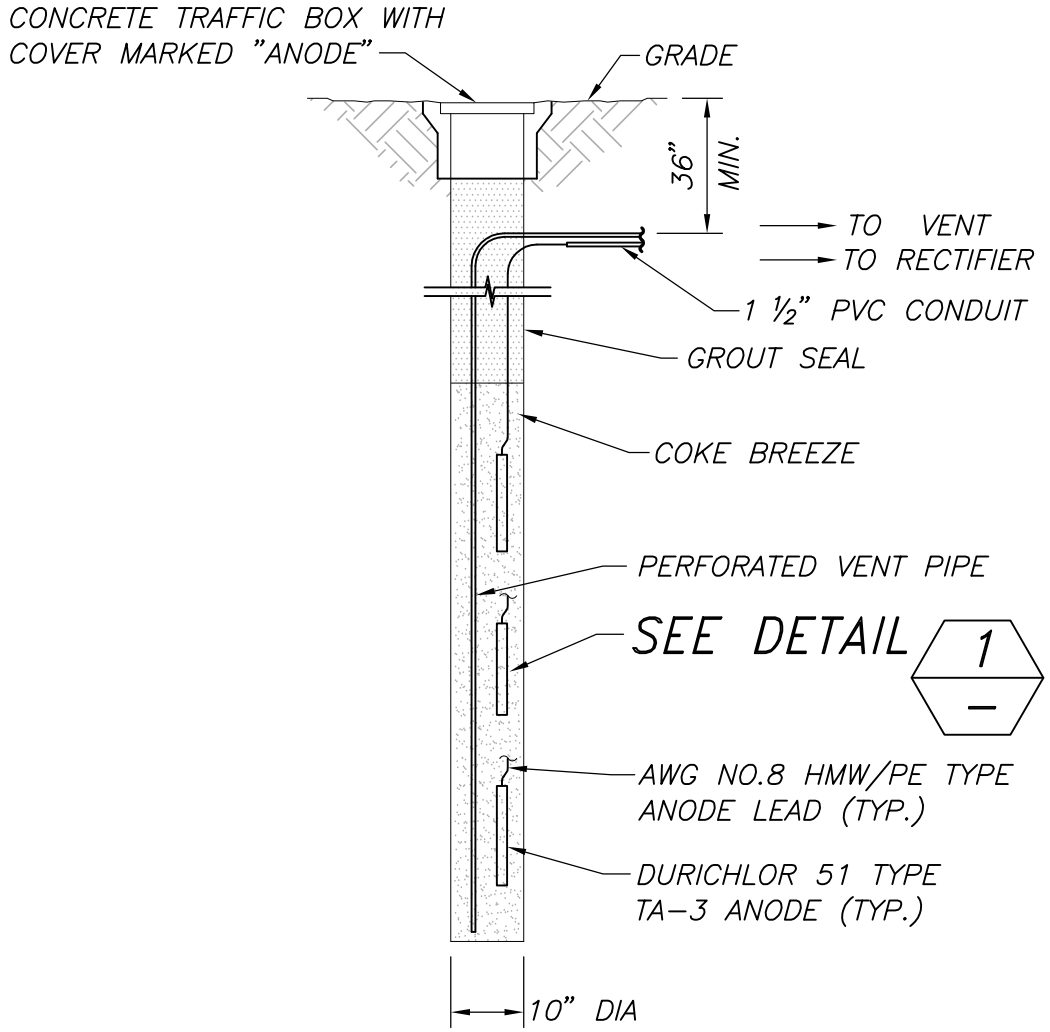

IMPRESSED CURRENT SHALLOW GROUND BED ELEVATION

SCALE: NTS

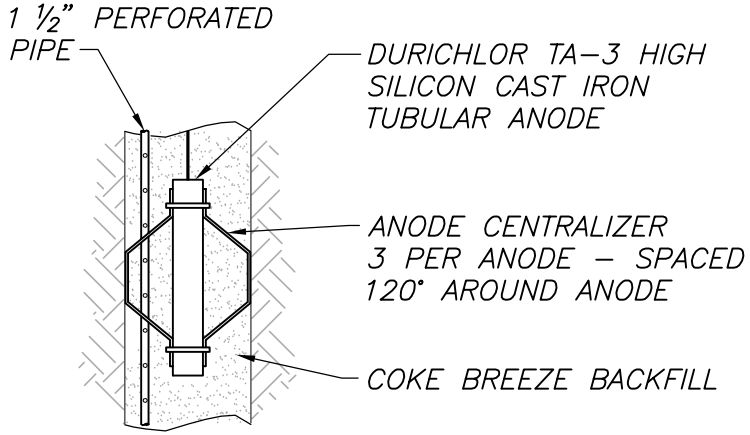

DETAIL 1 —

SCALE: NTS

SHALLOW WELL GROUND BED

NO SCALE	FILE NO. SD0046	APPROV. BY: RKT	REV. DATE: 3-27-98

Back to page 1

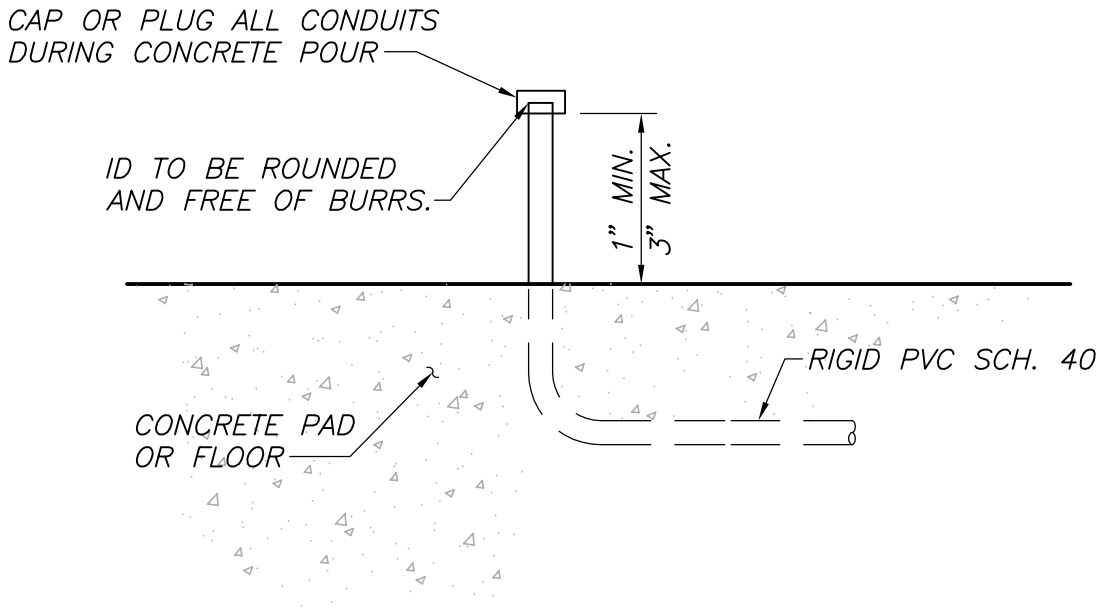

NOTE:

APPLICABLE IN ALL AREAS PROTECTED BY
A FLOOR MOUNTED ENCLOSURE ONLY.

ALTERNATE CONDUIT STUB UP

NO SCALE	FILE NO. SD0047	APPROV. BY: RKT	REV. DATE: 5-12-95

Back to page 1

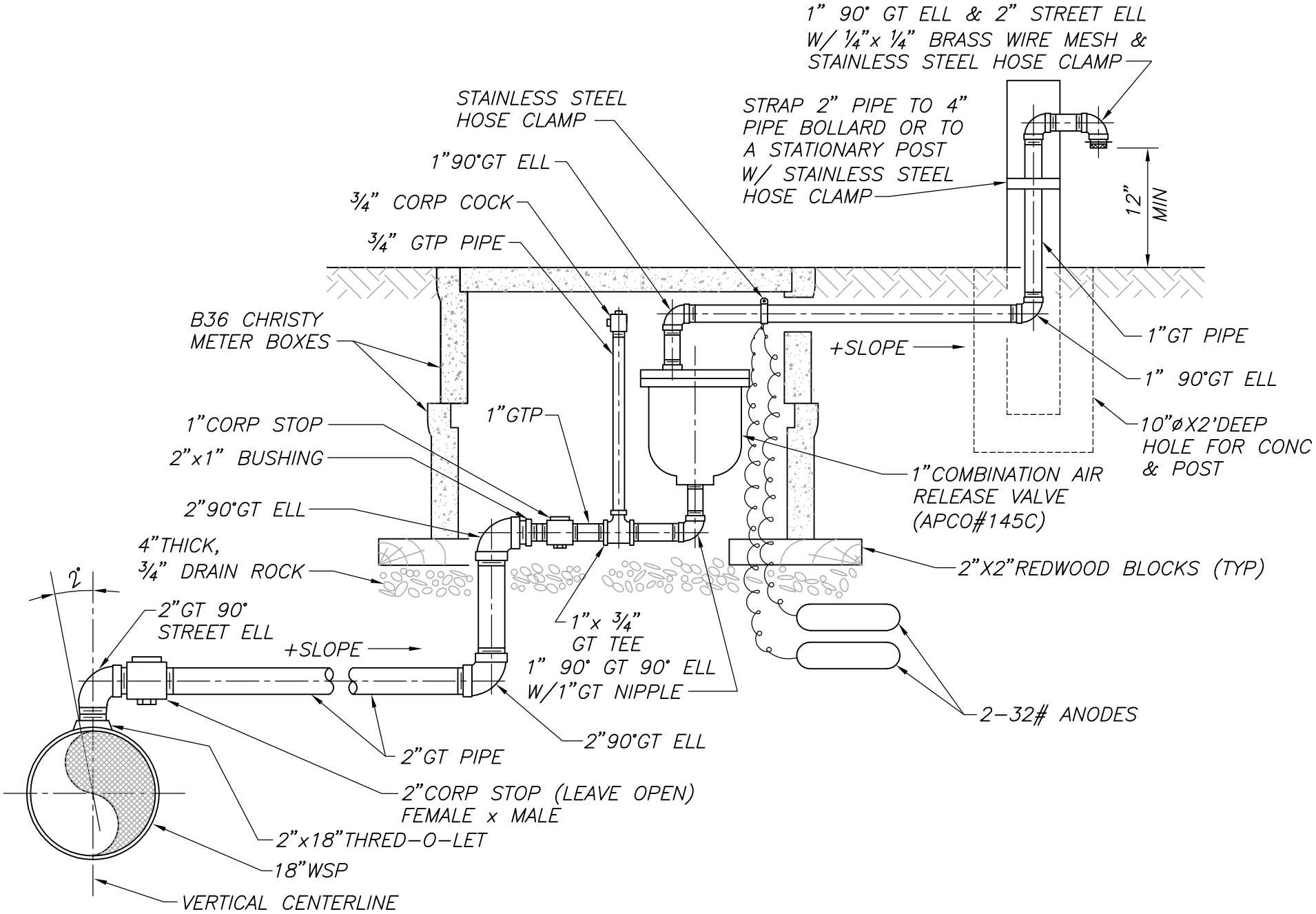

TYPICAL AIR/VACUUM RELEASE VALVE

NO SCALE	FILE NO. SD0048	APPROV. BY: RKT	REV. DATE: 1-15-96

Back to page 1

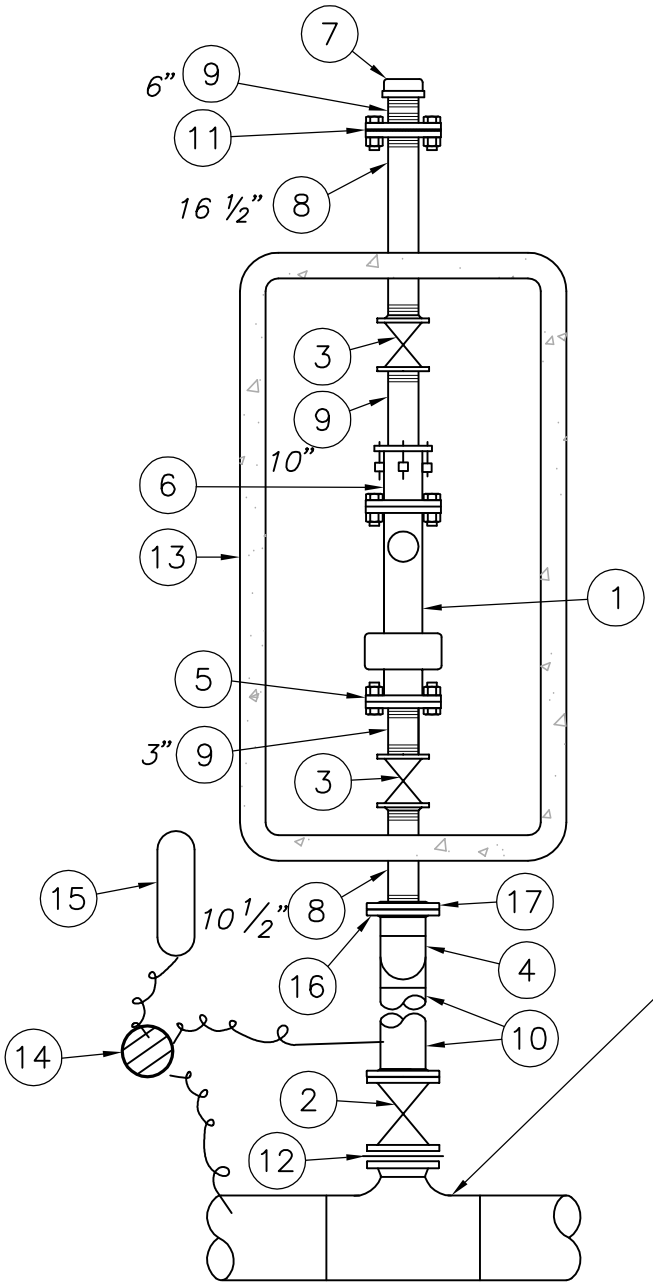

MATERIAL LIST		
ITEM NUMBER	DESCRIPTION	NUMBER REQUIRED
1	3" FLANGED TURBO METER	1
2	4" FLANGED GATE VALVE	1
3	3" THREADED BRASS GATE VALVE	2
4	4" 90° WELD ELL	2
5	3" METER FLANGE	1
6	3" FLANGE COUPLING ADAPTER	1
7	3" THREADED CAP	1
8	3" THREADED BRASS NIPPLE (10 ½", 16 ½" LONG)	1 EA
9	3" THREADED BRASS NIPPLE (3", 6", 10" LONG)	1 EA
10	4" WELDED STEEL PIPE	
11	3" FLANGE INSULATING KIT	1
12	4" FLANGE INSULATING KIT	1
13	CHRISTY B-52 METER BOX AND B52-62G STEEL COVER	1
14	TYPE "C" CTS	1
15	32# PACKAGED ANODE	1
16	4" SLIP-ON FLANGE	2
17	4" X 3" THREADED REDUCING FLANGE	1

WHEN TAPPING PVC, AC OR CI PIPE, USE TEE OR TAPPING SLEEVE. CONNECT TRACER WIRE TO SADDLE WITH A LEAD.

NOTE:

1. PRIME AND WRAP ALL BARE METAL IN CONTACT WITH GROUND EXCEPT METAL BONNET AND 3" CAP.
2. INSTALL METER BOX 4" ABOVE FINISH GRADE IF IN PLANTER AREA.
3. BURY ANODE 2 FEET BELOW PIPE.
4. PROPER BACKFLOW PROTECTION MUST BE INSTALLED ON THE CONSUMER SIDE OF METER ASSEMBLY.

3" TURBO METER

NO SCALE	FILE NO. SD0049	APPROV. BY: RKT	REV. DATE: 1-15-96

Back to page 1

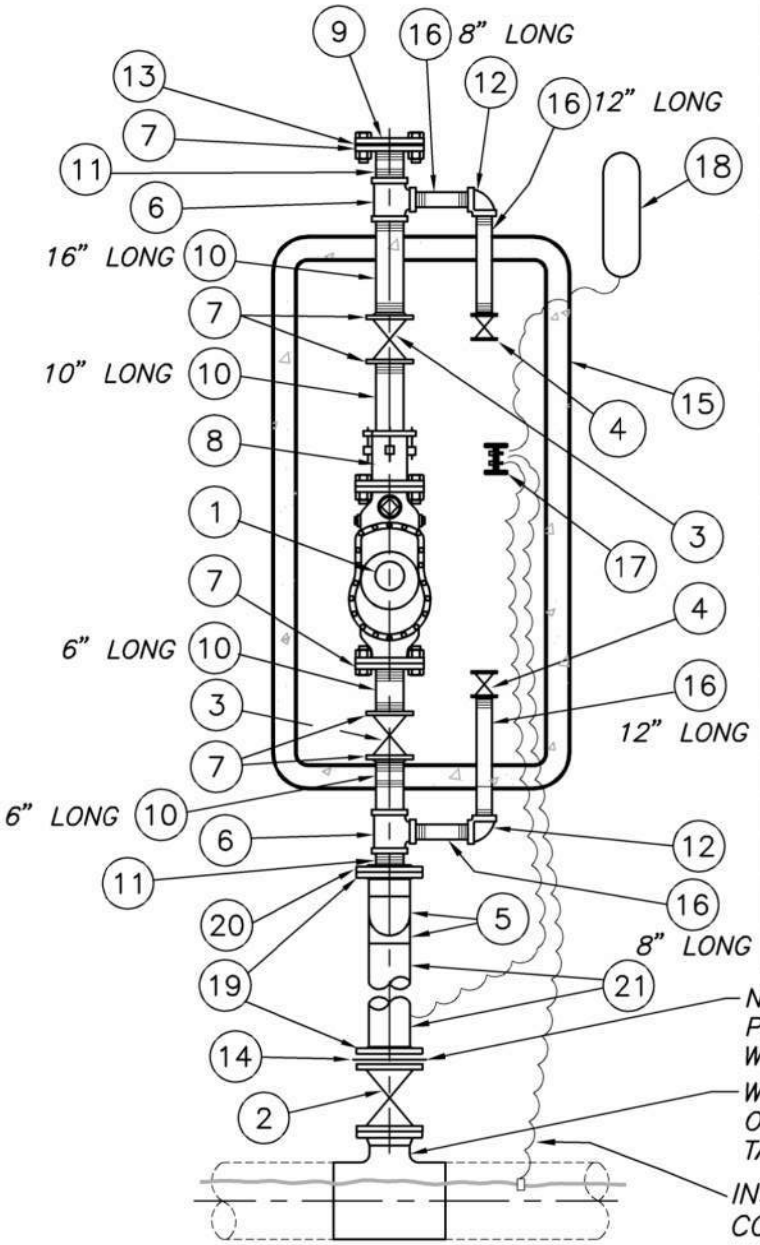

NOT REQUIRED FOR AC OR PVC. FOR WSP, VERIFY WITH CORROSION DEPT.

WHEN TAPPING PVC, AC OR CI PIPE, USE TEE OR TAPPING SLEEVE.

INSTALL TEST LEAD & CONNECT TO TRACER WIRE WITH SPLIT BOLT WHEN TAPPING AC OR PVC PIPE.

MATERIAL LIST

ITEM NUMBER	DESCRIPTION	NUMBER REQUIRED
1	3" FLANGED METER	1
2	4" FLANGED GATE VALVE	1
3	3" FLG X FLG GATE VALVE	2
4	2" THREADED BRASS GATE VALVE	2
5	4" 90° WELD ELL	2
6	3"x 2" THREADED BRASS TEE	2
7	3" STD SCREW FLANGE	5
8	3" FLANGE COUPLING ADAPTER (SHORT BARREL)	1
9	3" BLIND FLANGE	1
10	3" THREADED BRASS NIPPLE (6"–2 EA, 10"–1 EA, 16"–1 EA)	4
11	3" CLOSE BRASS NIPPLE	2 EA
12	2" THREADED BRASS ELBOW	2
13	3" FLANGE INSULATING KIT	1
14	4" FLANGE INSULATING KIT AFTER GATE VALVE	1
15	30" x 60" METER BOX AND STEEL COVER	1
16	2" THREADED BRASS NIPPLE (8",12" LONG)	2 EA
17	TYPE "B" CTS IN METER BOX	1
18	32# PACKAGED ANODE	1
19	4" SLIP–ON FLANGE	2
20	4" x 3" REDUCING STD SCREW FLANGE	1
21	4" WELDED STEEL PIPE	1

NOTE:

1. PRIME AND WRAP ALL BARE METAL IN CONTACT WITH GROUND EXCEPT METAL BONNET AND 3" CAP.
2. INSTALL METER BOX 4" ABOVE FINISH GRADE IF IN PLANTER AREA.
3. BURY ANODE 2 FEET BELOW PIPE, SEE STD DETAIL SD009.
4. SERVICES FOR SCHOOLS, HOSPITALS, LARGE BUILDINGS AND IRRIGATION, INSTALL PROPER BACKFLOW PREVENTION ON CONSUMER SIDE OF BYPASS.

3" DOMESTIC METER WITH BYPASS

NO SCALE	FILE NO. SD0050	APPROV. BY: EI	REV. DATE: FEB '19

Back to page 1

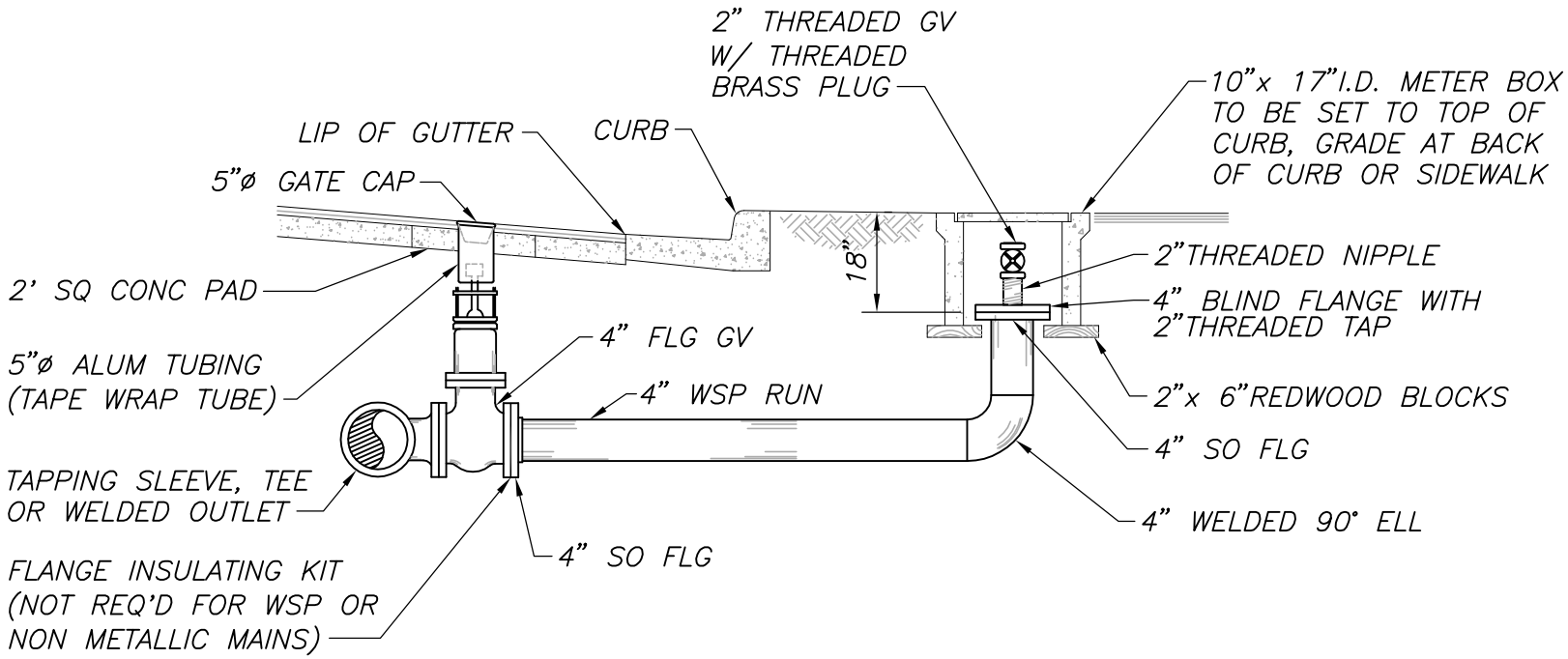

BULLHEAD

NO SCALE	FILE NO. SD0051	APPROV. BY: RKT	REV. DATE: 1-15-96

Back to page 1

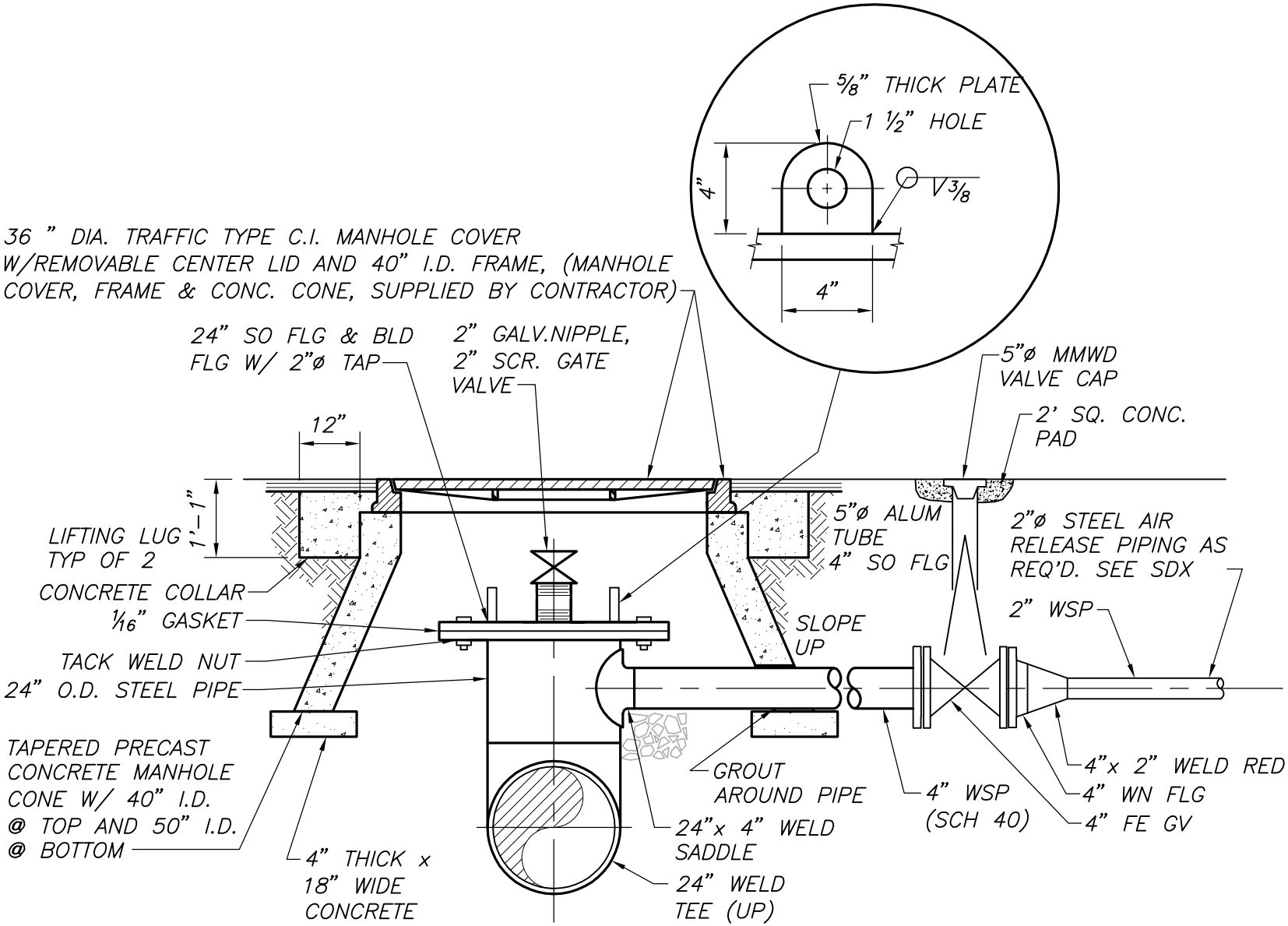

24"MANWAY/DRAIN

NO SCALE	FILE NO. SD0052	APPROV. BY: RKT	REV. DATE: MAR '13

Back to page 1

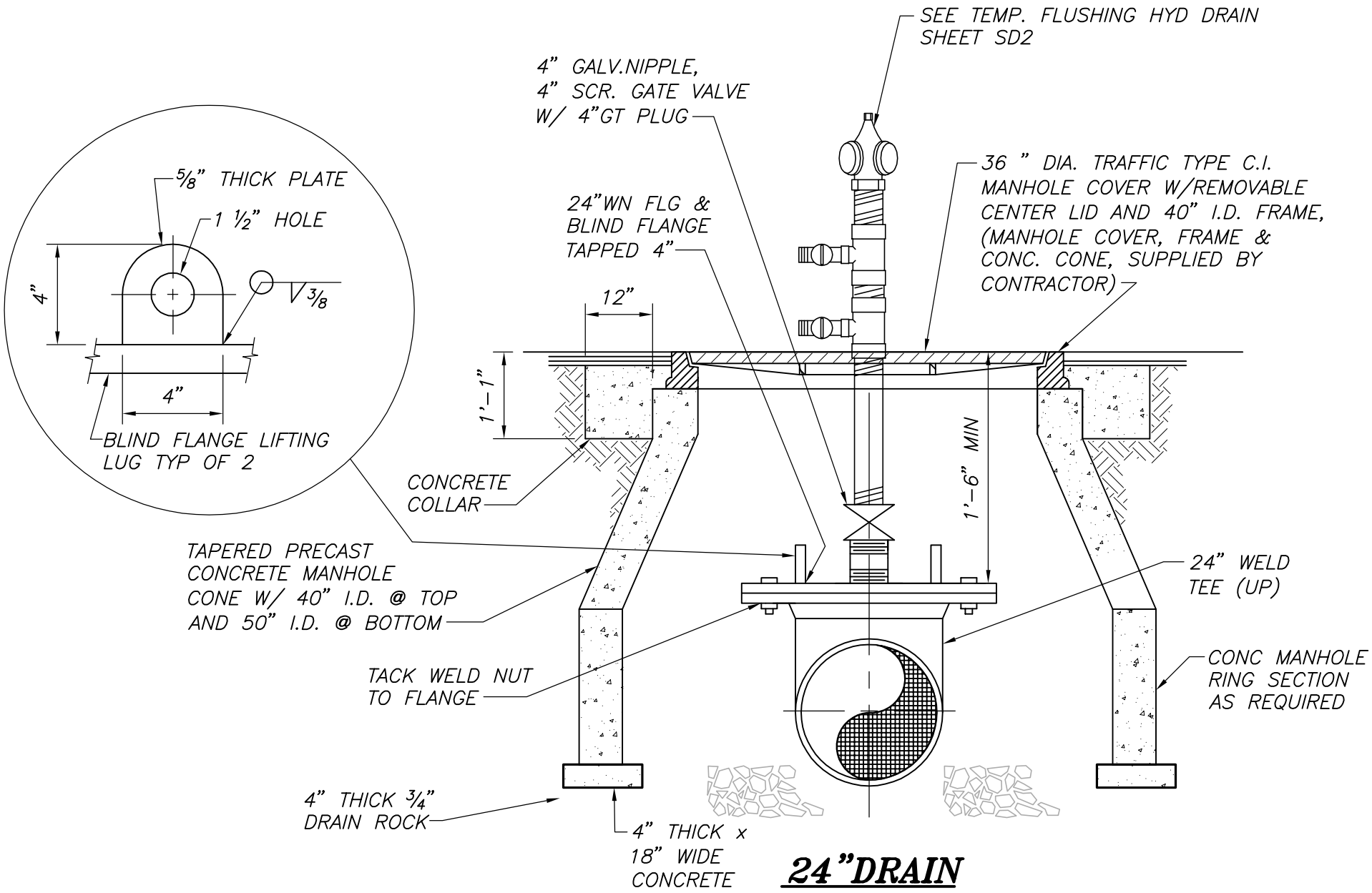

24"DRAIN

NO SCALE	FILE NO. SD0053	APPROV. BY: RKT	REV. DATE: MAR '13

Back to page 1

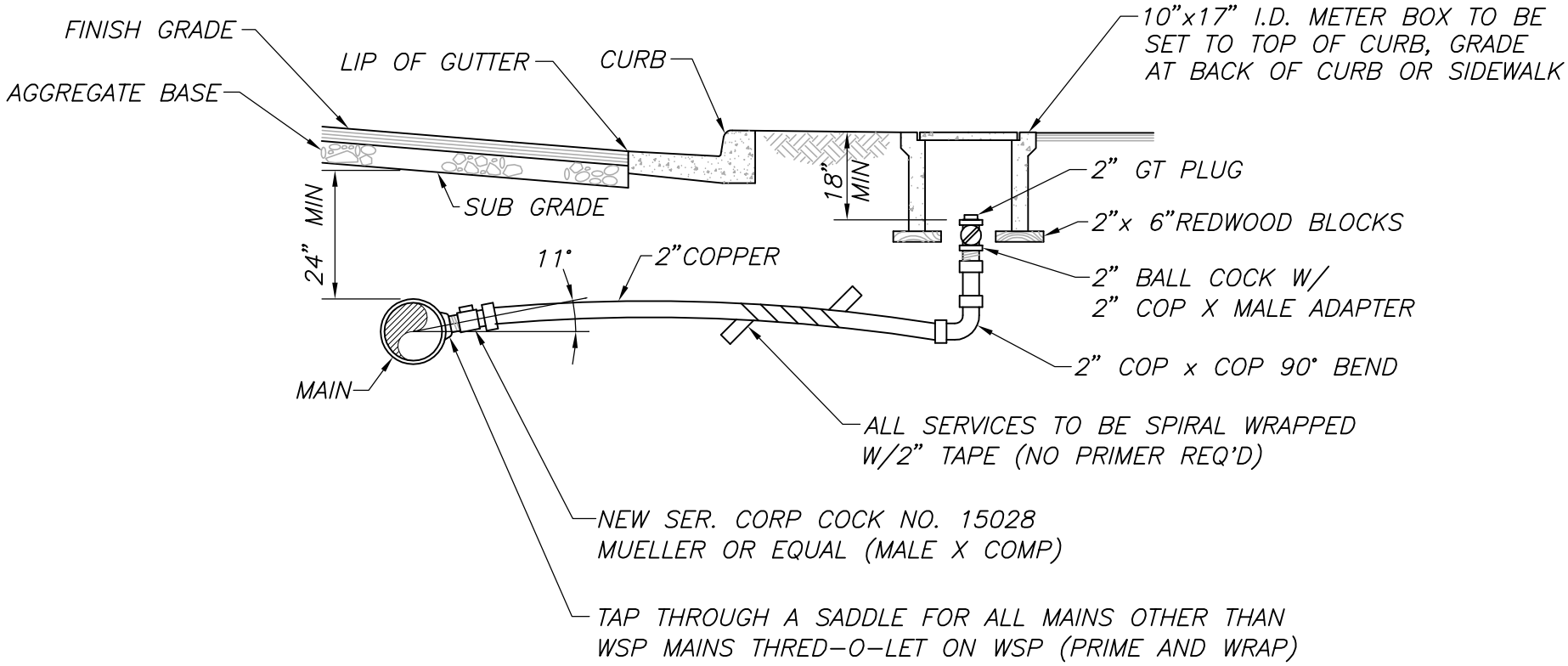

2" BULLHEAD

NO SCALE	FILE NO. SD0054	APPROV. BY: RKT	REV. DATE: 3-26-96

Back to page 1

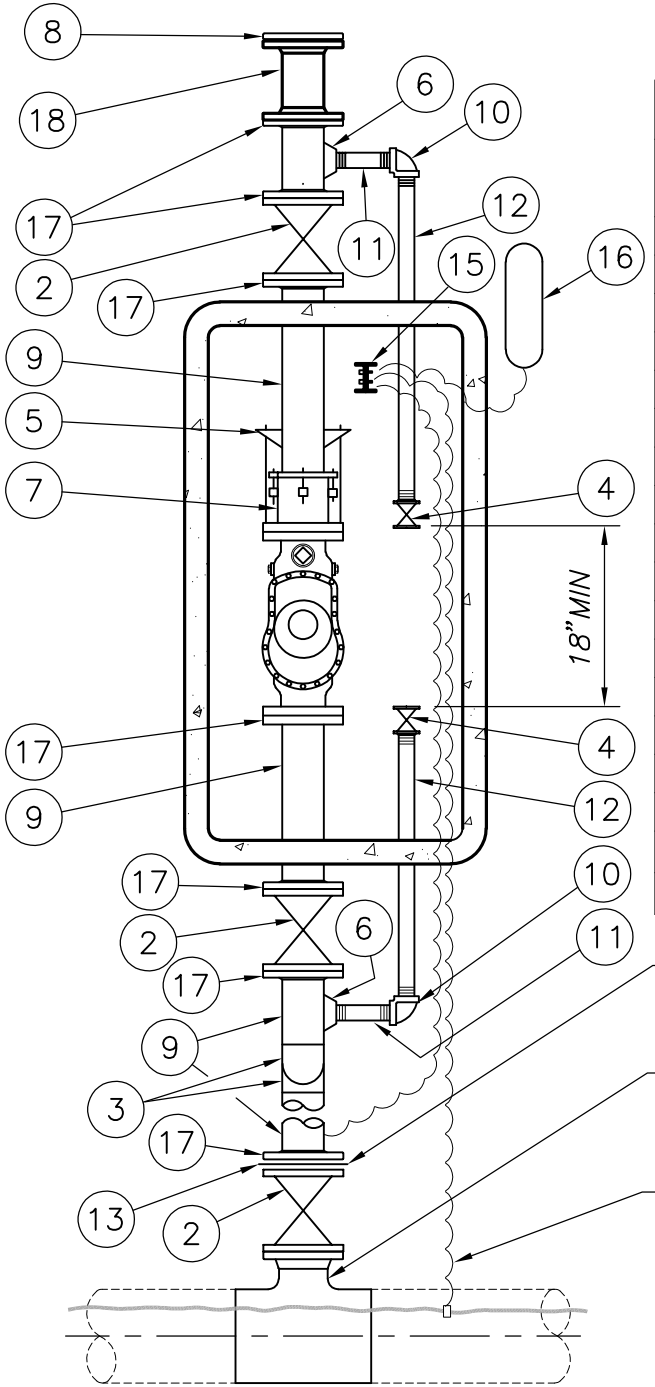

NOT REQUIRED FOR AC OR PVC. FOR WSP, VERIFY WITH CORROSION DEPT.

WHEN TAPPING PVC, AC OR CI PIPE, USE TEE OR TAPPING SLEEVE.

INSTALL TEST LEAD & CONNECT TO TRACER WIRE WITH SPLIT BOLT WHEN TAPPING AC OR PVC PIPE.

MATERIAL LIST

ITEM NO	DESCRIPTION	NO REQUIRED
1	4" FLANGED COMPOUND METER	1
2	4" FLANGED GATE VALVE	3
3	4" 90° WELD ELL	2
4	2" THREADED BRASS GATE VALVE	2
5	HARNESS (2 RODS & 2 EARS)	1
6	4"x2" THRED-O-LET	2
7	4" FLANGE COUPLING ADAPTER	1
8	4" BLIND FLG	1
9	4" WELDED STEEL PIPE	
10	2" THREADED BRASS ELBOW	2
11	2" THREADED BRASS NIPPLE (8" LONG)	2
12	2" BRASS PIPING	
13	4" FLANGE INSULATING KIT	2
14	CHRISTY B-52 METER BOX AND B52-62G STEEL COVER	1
15	TYPE "B" CTS IN METER BOX	1
16	32# PACKAGED ANODE	1
17	4" SLIP-ON FLANGE	7
18	4" HDPE SPOOL KIT	1

NOTES:

1. PRIME AND WRAP ALL BARE METAL IN CONTACT WITH GROUND EXCEPT METAL BONNET AND 4" BLIND FLG.
2. INSTALL METER BOX 4" ABOVE FINISH GRADE IF IN PLANTER AREA.
3. BURY ANODE 2 FEET BELOW PIPE.
4. SERVICES FOR SCHOOLS, HOSPITALS, LARGE BUILDINGS AND IRRIGATION, INSTALL PROPER BACKFLOW PREVENTION ON CONSUMER SIDE OF BYPASS.

4" COMPOUND METER WITH BYPASS

NO SCALE	FILE NO. SD0055	APPROV. BY: EI	REV. DATE: FEB '19

Back to page 1

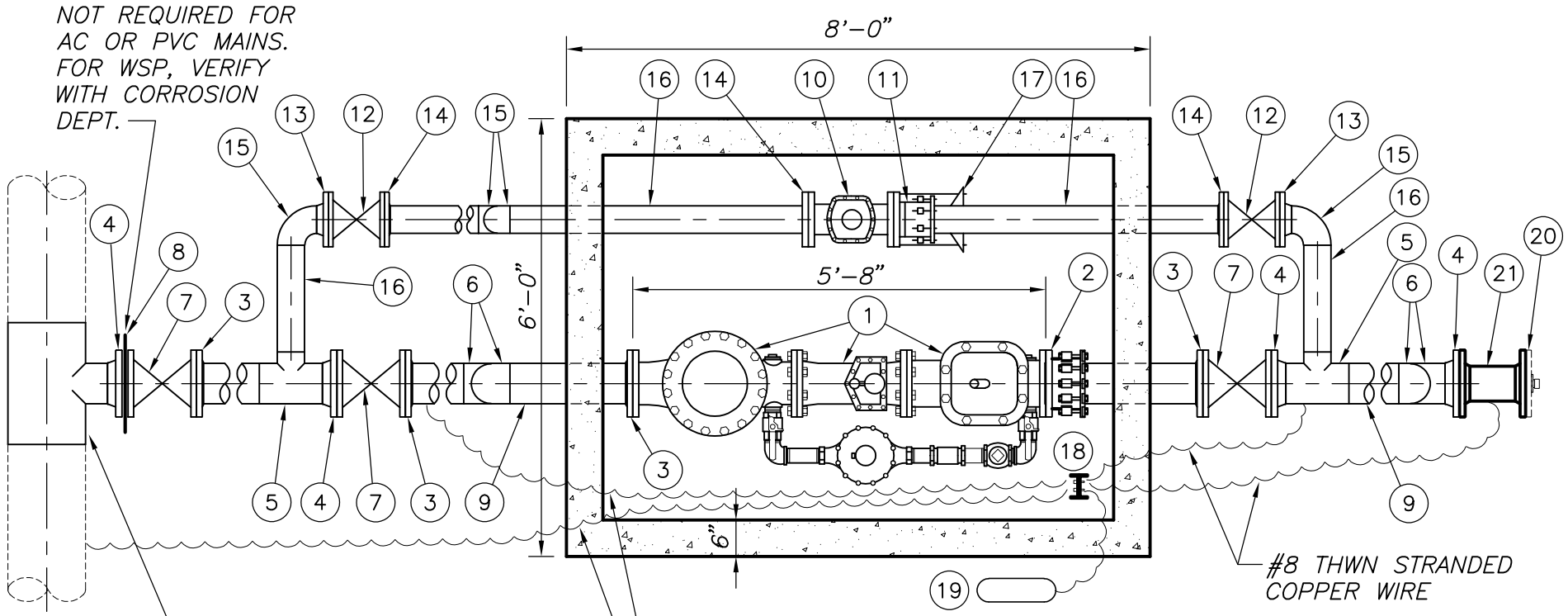

MATERIAL LIST

ITEM NUMBER	DESCRIPTION	NUMBER REQUIRED
1	6" COMPACT FIRELINE "ROCKWELL FIRELINE ASSEMBLY"	1
2	6" FLG CPLG ADAPTER W/ ANCHOR STUDS	1
3	6" SO FLG	4
4	6" WN FLG	4
5	6"x 4" WELD TEE	2
6	6" 90° WELD ELL	4
7	6" FE GV	3
8	6" FLG INSL KIT	2
9	6" WELDED STEEL PIPE	
10	4" FE TURBO MTR	1
11	4" FLG CPLG ADAPTER	1
12	4" FE GV	2
13	4" WN FLG	2
14	4" SO FLG	3
15	4" 90° WELD ELL	4
16	4" WELDED STEEL PIPE	
17	HARNESS (2 RODS AND 2 EARS)	1
18	TYPE "B" CTS	1
19	32 LB ANODE	1
20	6" BLIND FLG TAPPED 2" W/ 2" GTP PLUG	1
21	6" HDPE SPOOL KIT	1

NOTES:

1. PRIME AND WRAP ALL BARE METAL IN CONTACT WITH GROUND EXCEPT METAL BONNET AND 6" BLIND FLG.
2. INSTALL VAULT 4" ABOVE FINISH GRADE IF IN PLANTER AREA.
3. BURY ANODE 2 FEET BELOW PIPE.
4. SERVICES FOR SCHOOLS, HOSPITALS, LARGE BUILDINGS AND IRRIGATION, INSTALL PROPER BACKFLOW PREVENTION ON CONSUMER SIDE OF BYPASS.

6" FIRE LINE WATER METER ASSEMBLIES

NO SCALE	FILE NO. SD0056	APPROV. BY: EI	REV. DATE: FEB '19

Back to page 1

NOTES:

1. FIRE DEPT CONN LOCATION IN RELATION TO THE CURB AND SIDEWALK MUST BE DETERMINED BY THE CONTROLLING FIRE MARSHAL.
2. PRIME AND WRAP ALL BARE METAL TO BOTTOM OF HYDRANT FLANGE.

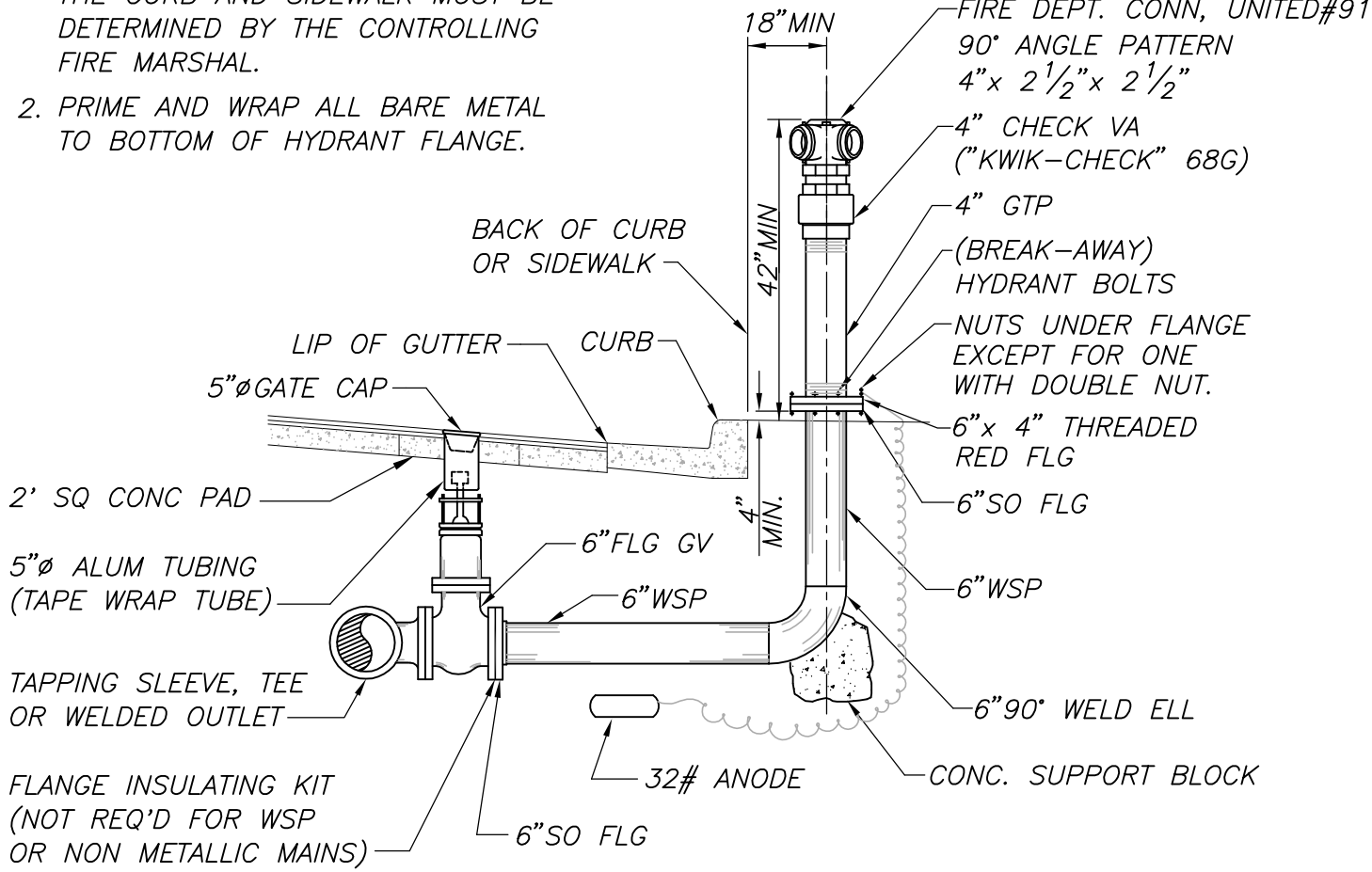

EMERGENCY PUMPING CONNECTION W/ CURB & GUTTER

NO SCALE	FILE NO. SD0057	APPROV. BY: RKT	REV. DATE: 7-21-97

Back to page 1

NOTES:

1. HYDRANT LOCATION IN RELATION TO THE CURB AND SIDEWALK MUST BE DETERMINED BY THE CONTROLLING FIRE MARSHAL.

2. PRIME AND WRAP ALL BARE METAL INCLUDING HYDRANT BURY & RISER UP TO BOTTOM OF HYDRANT FLANGE.

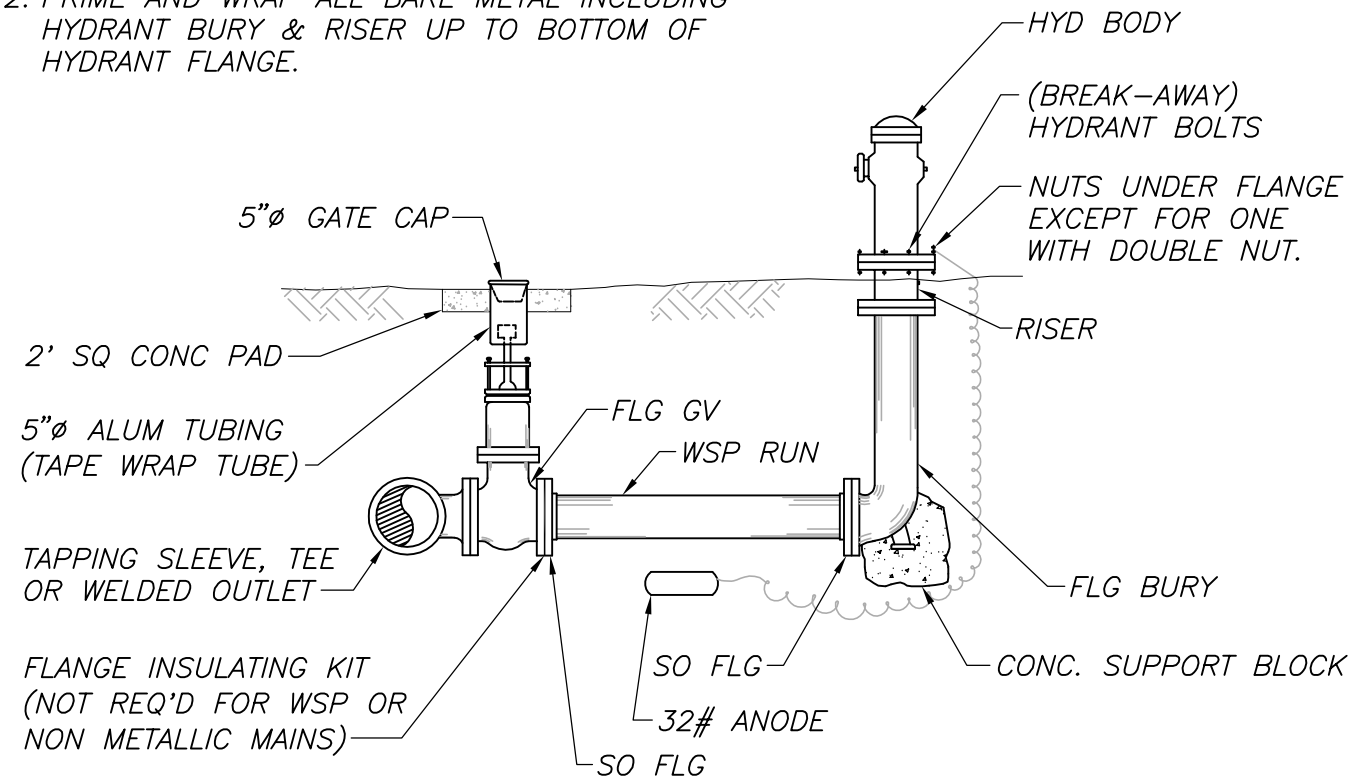

HYDRANT OFF IMPROVED AREA

NO SCALE	FILE NO. SD0058	APPROV. BY: RKT	REV. DATE: 7–19–96

Back to page 1

NOTES:

1. WHARF HYD LOCATION IN RELATION TO THE CURB AND SIDEWALK MUST BE DETERMINED BY THE CONTROLLING FIRE MARSHAL.
2. PRIME AND WRAP ALL BARE METAL TO BOTTOM OF HYDRANT FLANGE.

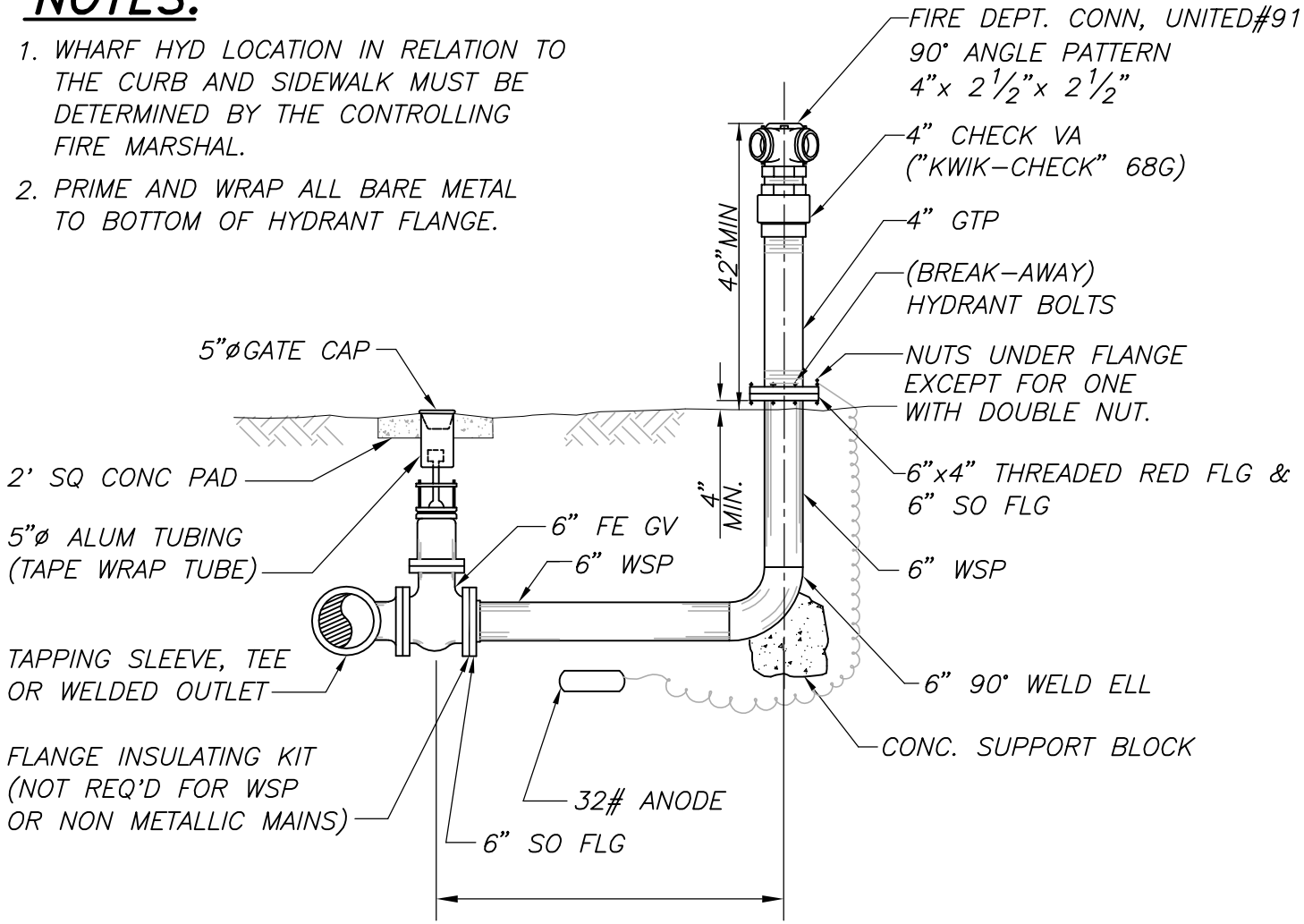

EMERGENCY PUMPING CONNECTION W/O CURB & GUTTER

NO SCALE	FILE NO. SD0059	APPROV. BY: RKT	REV. DATE: 5-5-03

Back to page 1

NOTES:

1. CONCRETE SHALL BE PLACED 7 DAYS PRIOR TO PIPE CONNECTION.
2. PRIME AND WRAP ALL BARE METAL INCLUDING RODS INSIDE CONCRETE BLOCKS.

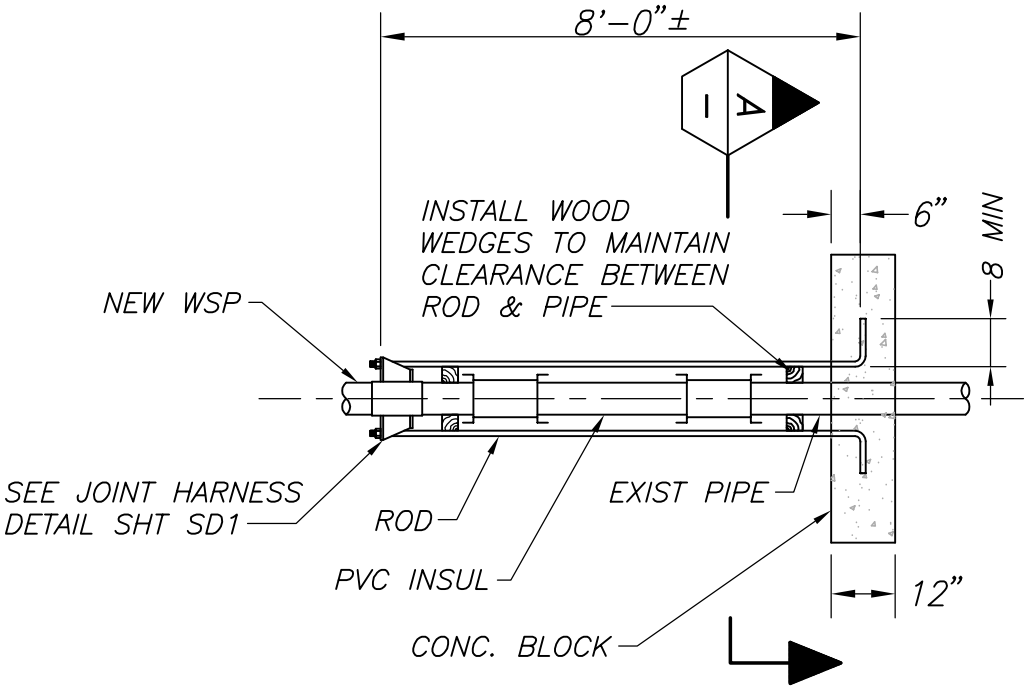

PLAN

SCALE: NTS

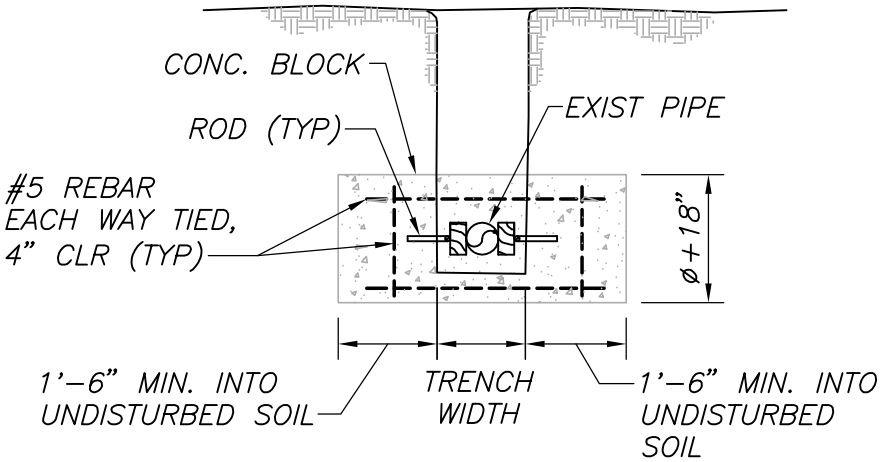

SECTION A/1

SCALE: NTS

JOINT RESTRAINT ASSEMBLY

N.T.S.	FILE NO. SD0060	APPROV. BY: RKT	REV. DATE: 12/3/96

Back to page 1

NOTES:

1. CONCRETE SHALL BE PLACED 7 DAYS PRIOR TO PIPE CONNECTION.
2. PRIME AND WRAP ALL BARE METAL INCLUDING RODS INSIDE CONCRETE BLOCKS.

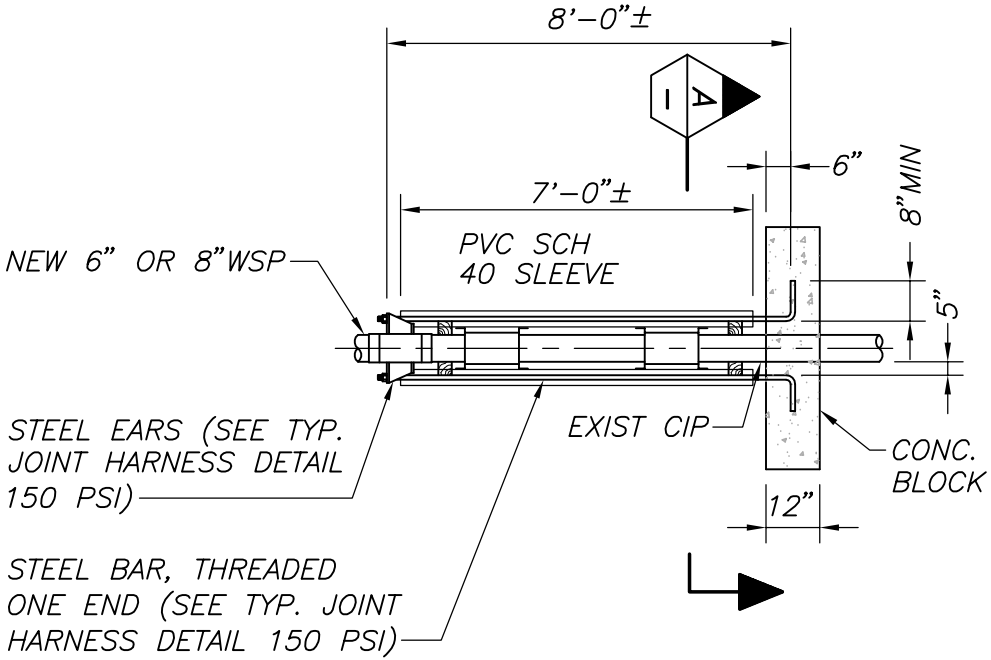

PLAN

SCALE: NTS

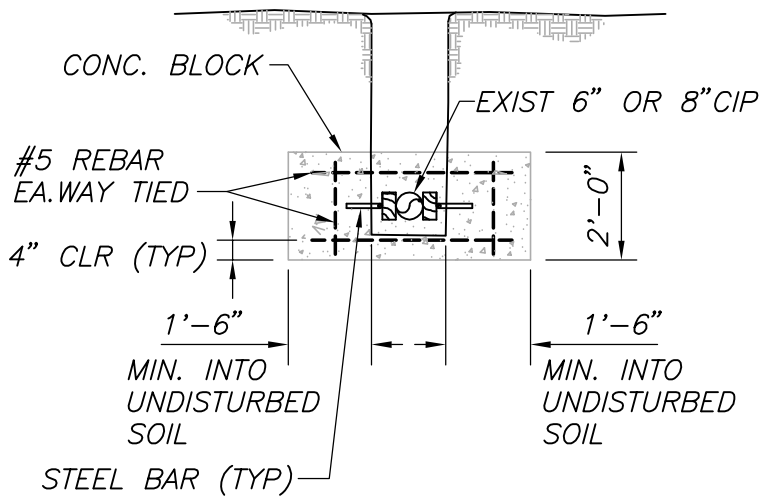

SECTION A/1

SCALE: NTS

CONCRETE ANCHOR BLOCK 6" & 8" CONNECTIONS

NO SCALE	FILE NO. SD0061	APPROV. BY: RKT	REV. DATE: 12-30-97

Back to page 1

NOTES:

1. CONCRETE SHALL BE PLACED 7 DAYS PRIOR TO PIPE CONNECTION.
2. PRIME AND WRAP ALL BARE METAL INCLUDING RODS INSIDE CONCRETE BLOCKS, AND INSIDE PVC SLEEVES.

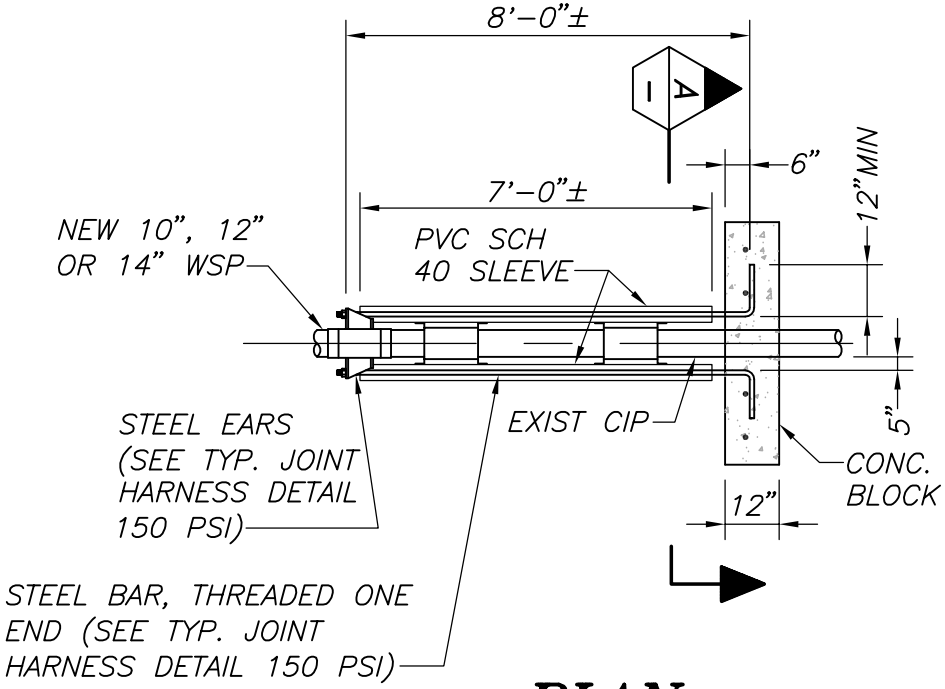

PLAN

SCALE: NTS

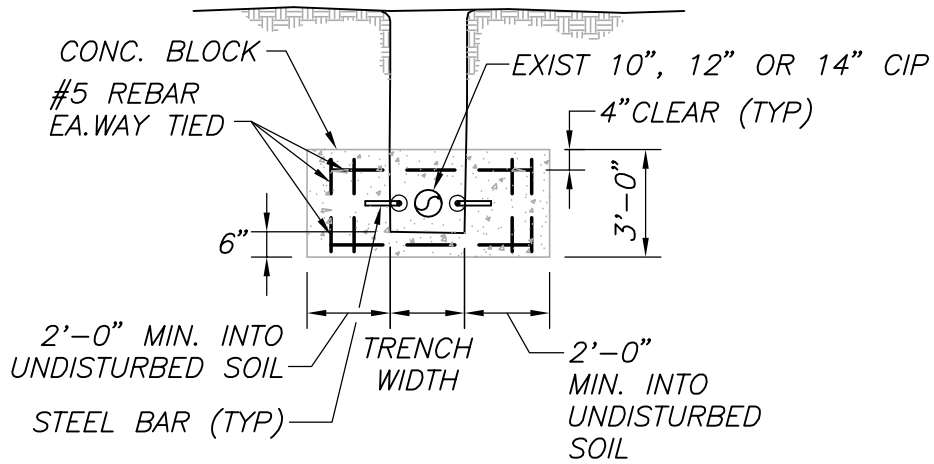

SECTION A

SCALE: NTS

CONCRETE ANCHOR BLOCK 10", 12" & 14" CONNECTIONS

NO SCALE	FILE NO. SD0062	APPROV. BY: RKT	REV. DATE: 12-30-97

Back to page 1

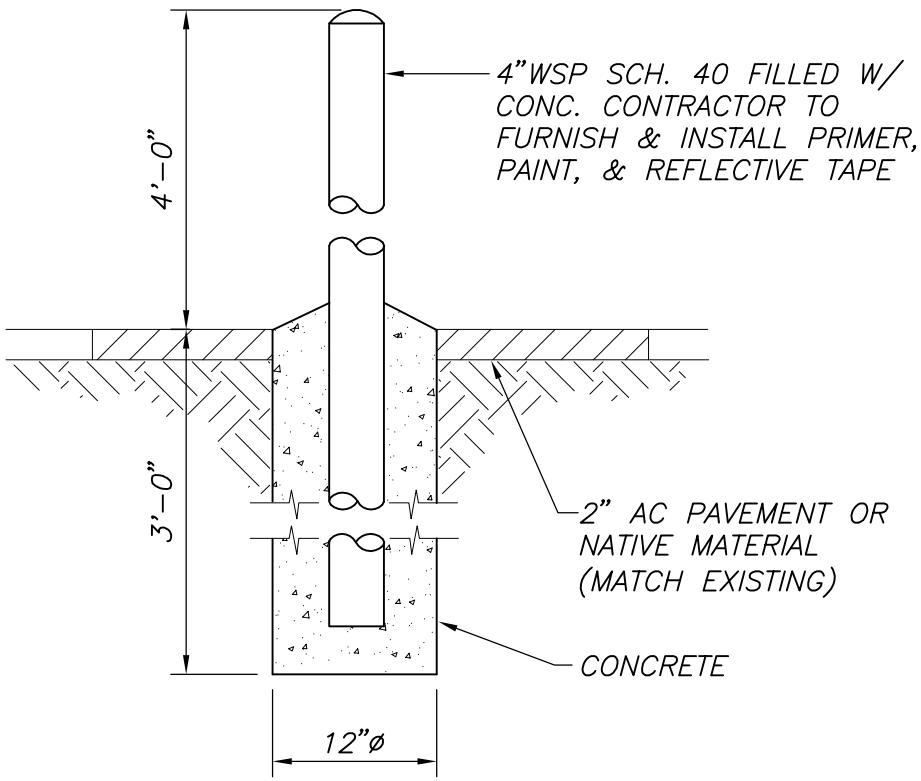

NOTES:

PRIMER: 1. COAT ALKYD RUST INHIBITING PRIMER – SHERWIN WILLIAMS KEM-KROMIK UNIVERSAL METAL PRIMER OR APPROVED EQUAL.

PAINT: 2. COATS HIGH GLOSS EXTERIOR LATEX ENAMEL – SHERWIN WILLIAMS DTM ACRYLIC COATING OR APPROVED EQUAL. FINISH COLOR SHALL BE DETERMINED BY THE ENGINEER.

REFLECTIVE TAPE: APPLY TWO ROUNDS OF TWO INCH WIDE REFLECTIVE TAPE. THE FIRST ROUND SHALL BE PLACED TWO INCHES FROM TOP EDGE OF THE STEEL PIPE. SPACING BETWEEN ROUNDS SHALL BE TWO INCHES. REFLECTIVE TAPE SHALL BE RATED AS REFLECTIVITY 1 ACCORDING TO FEDERAL SPECIFICATION L-S-300C AND SHALL MEET OSHA SPCIFICATIONS [1910.144(A)].

BOLLARD DETAIL

SCALE: N.T.S	FILE NO. SD0063	APPROV. BY: R.K.T.	REV. DATE: 9-12-97

Back to page 1

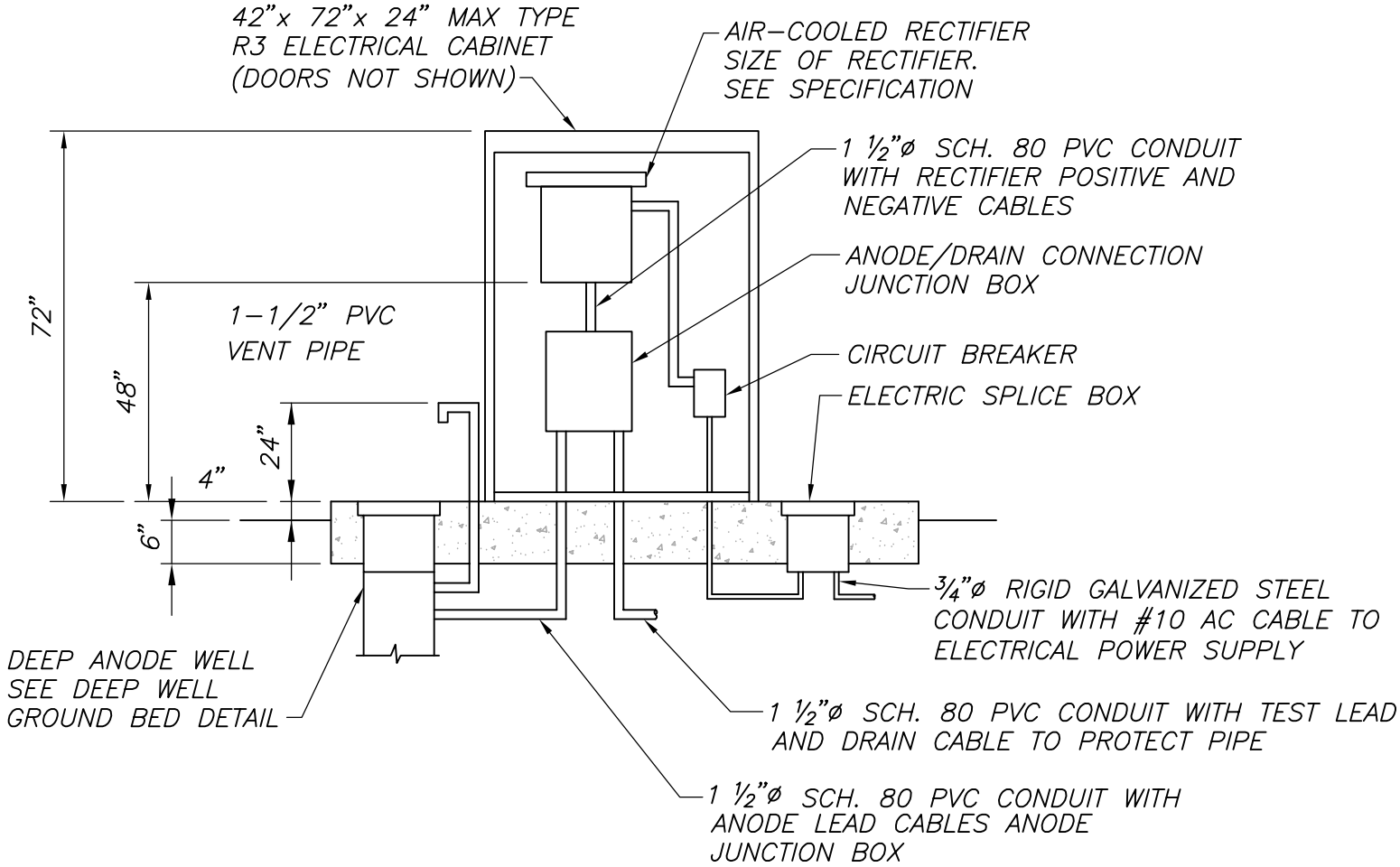

RECTIFIER ANODE JUNCTION BOX INSTALLATION

NO SCALE	FILE NO. SD0064	APPROV. BY:	REV. DATE: 9-19-97

Back to page 1

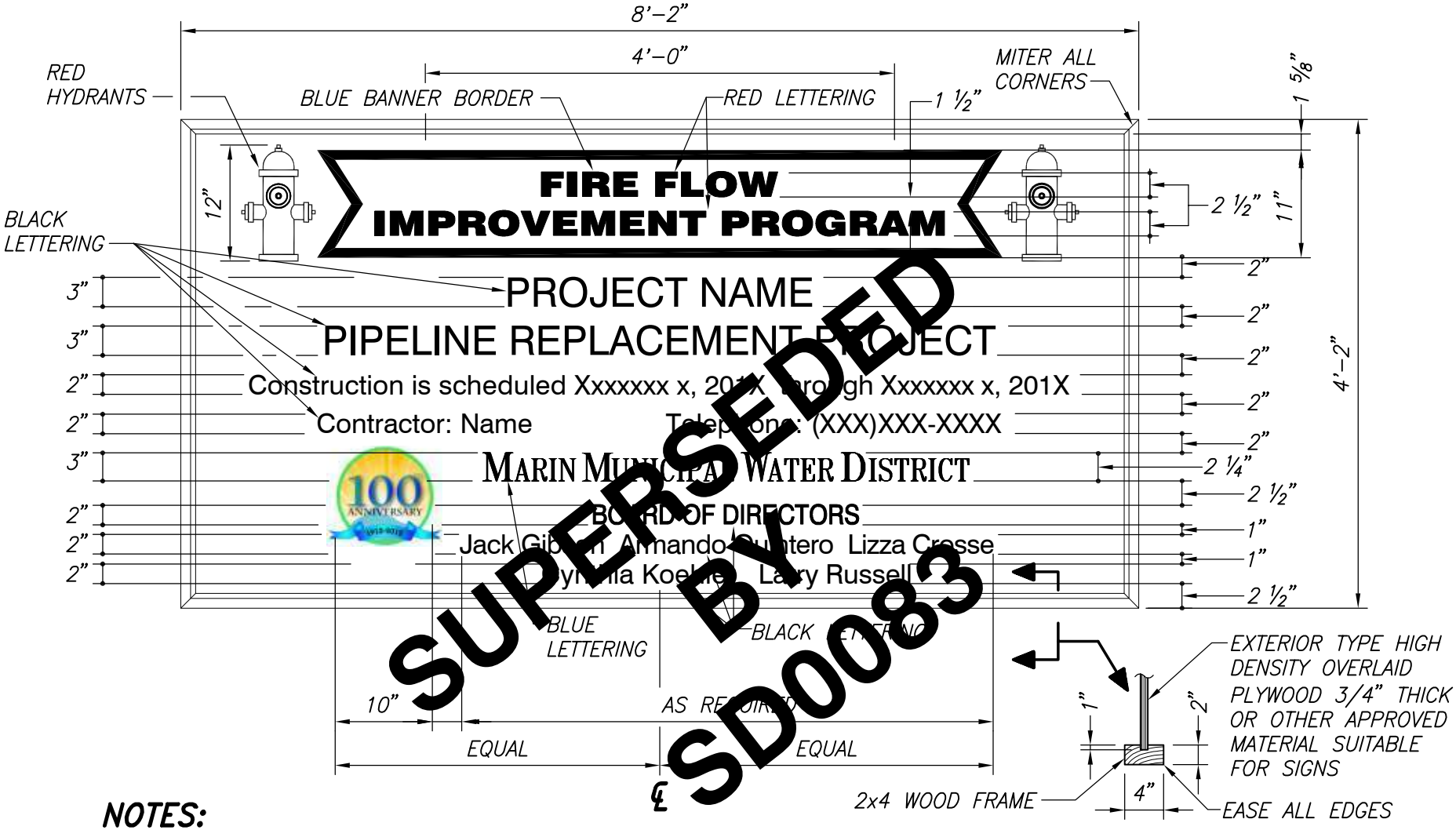

NOTES:

1. CENTER ALL TEXT WITHIN FIELD OF SIGN UNLESS TOHERWISE NOTED.
2. BACKGROUND AND ALL OTHER SIGN COMPONENTS SHALL BE PAINTED WHITE UNLESS OTHERWISE NOTED
3. PROVIDE ADEQUATE SUPPORTS FOR SIGN AS SITE CONDITIONS MAY REQUIRE. KEEP SIGN A PROPER DISTANCE ABOVE PREVAILING GRADE TO PERMIT PUBLIC VIEWING.
4. THE CONTRACTOR SHALL PROVIDE & ERECT THE PROJECT SIGN CONFORMING TO THESE DETAILS, AND AT THE LOCATION SHOWN ON THE CONTRACT DRAWINGS. THE CONTRACTOR SHALL SUBMIT FINAL SIGN LAYOUT TO THE ENGINEER PRIOR TO FABRICATION.

PROJECT SIGN

SCALE: NTS	FILE NO. SD0066	APPROV. BY: MB	REV. DATE: FEB. '13

Back to page 1

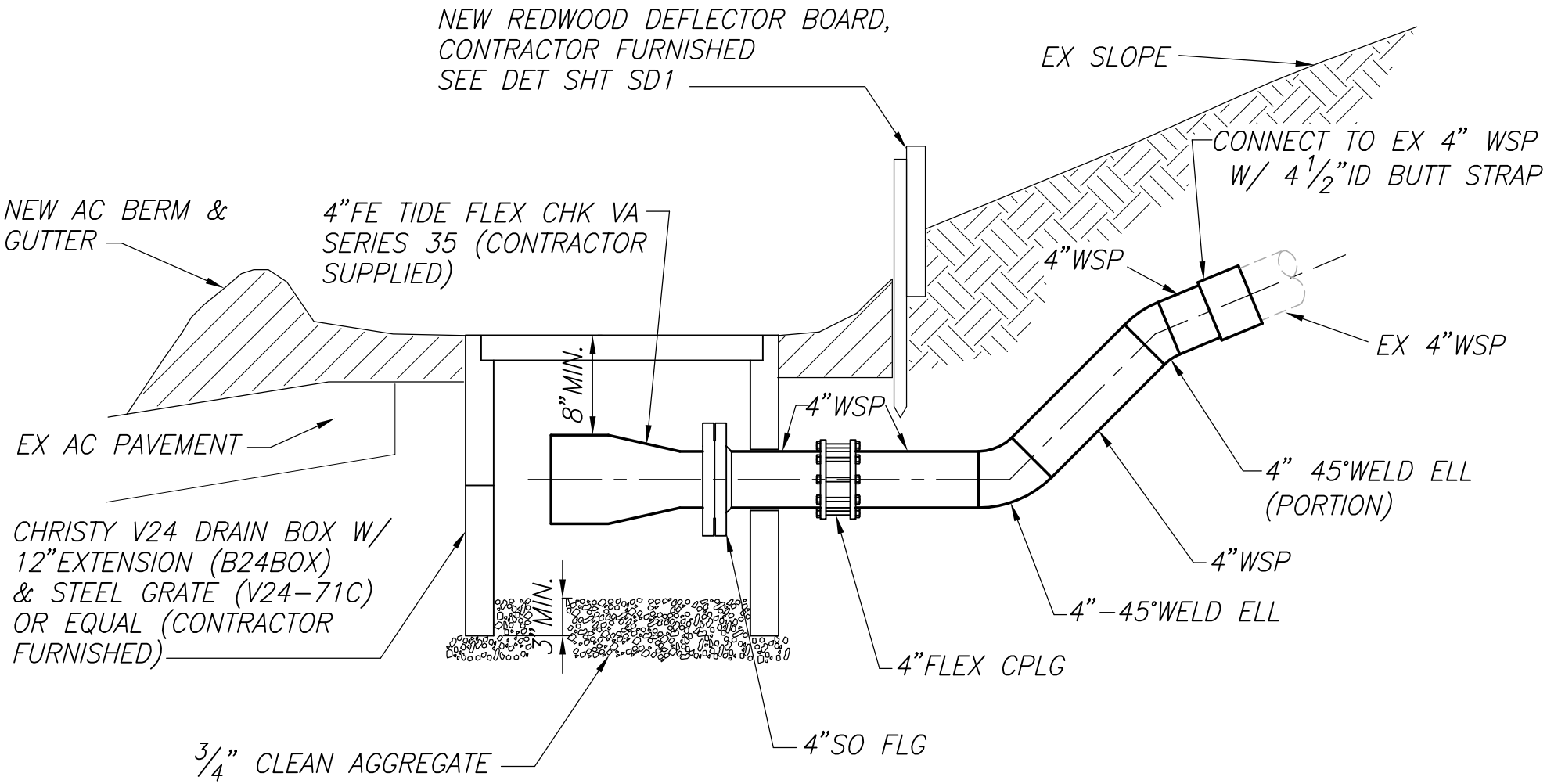

TIDE FLEX CHECK VALVE

N.T.S	FILE NO. SD0067	APPROV. BY:	REV. DATE: 1-13-98

Back to page 1

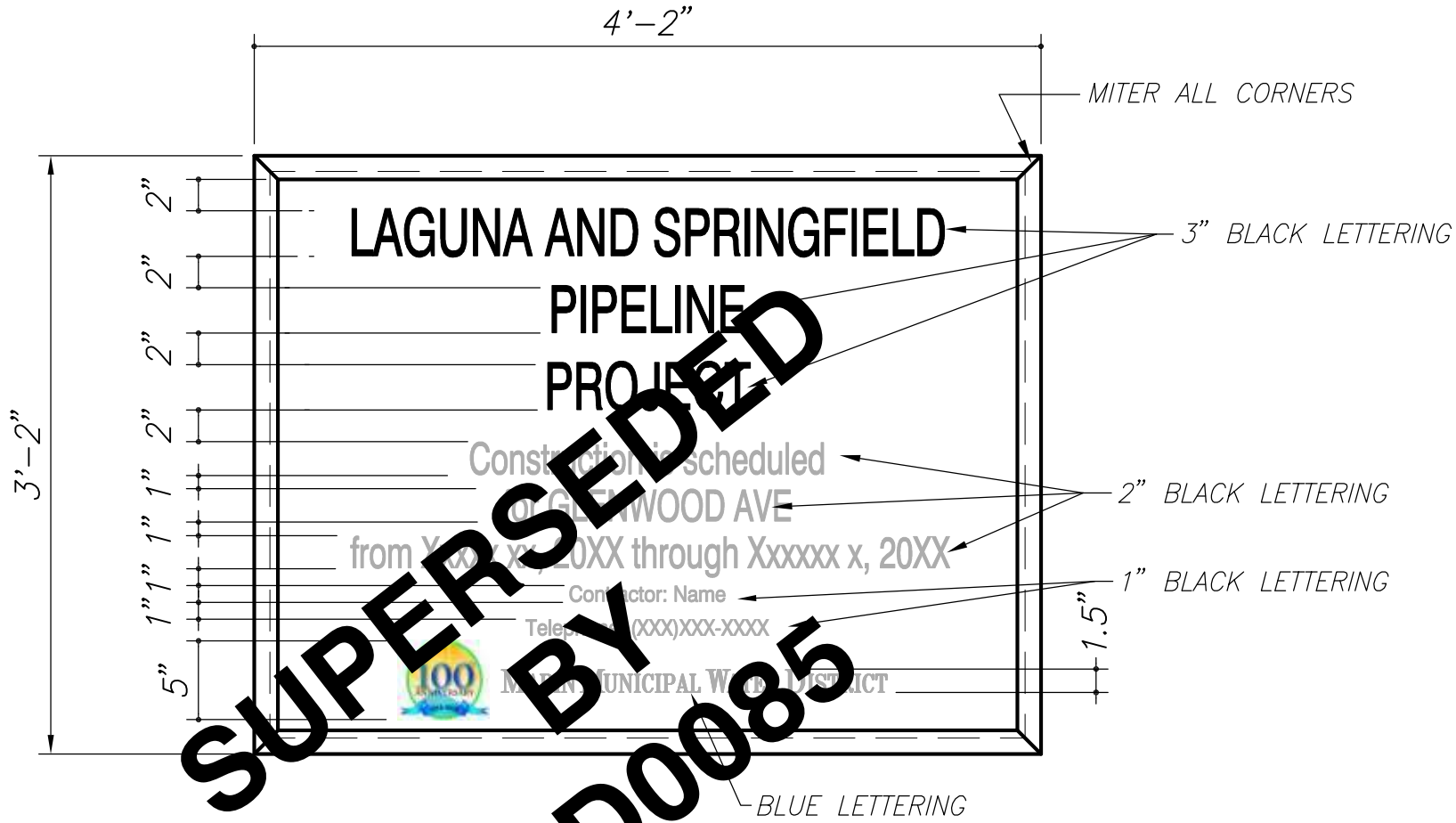

NOTES

1. CENTER ALL TEXT WITHIN FIELD OF SIGN UNLESS OTHERWISE NOTED.
2. BACKGROUND AND ALL OTHER SIGN COMPONENTS SHALL BE PAINTED WHITE UNLESS OTHERWISE NOTED.
3. PROVIDE ADEQUATE SUPPORTS FOR SIGN AS SITE CONDITIONS MAY REQUIRE. KEEP SIGN A PROPER DISTANCE ABOVE PREVAILING GRADE TO PERMIT PUBLIC VIEWING.
4. THE CONTRACTOR SHALL PROVIDE & ERECT THE PROJECT SIGN CONFORMING TO THESE DETAILS & AT THE LOCATION SHOWN ON THE CONTRACT DRAWINGS. THE CONTRACTOR SHALL SUBMIT FINAL SIGN LAYOUT TO THE ENGINEER PRIOR TO FABRICATION.

PROJECT SIGN

SCALE: NTS	FILE NO. SD0068	APPROV. BY: MB	REV. DATE: FEB. '13

Back to page 1

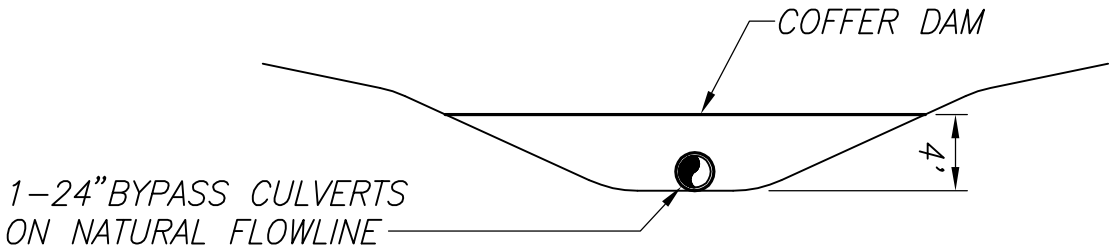

SECTION A-A

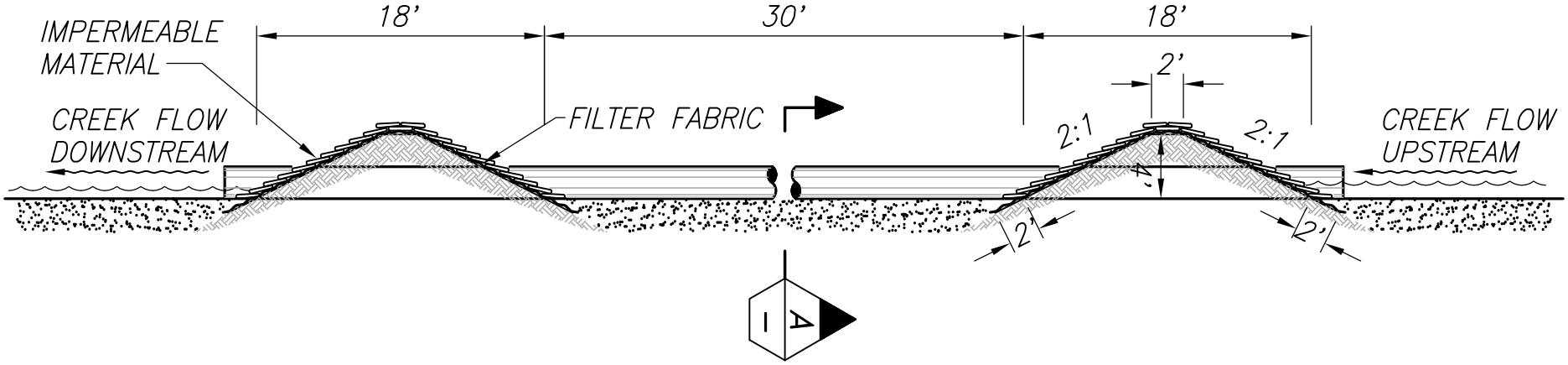

TEMPORARY DIVERSION / SEDIMENT DAMS & CULVERTS

SCALE: NTS	FILE NO. SD0069	APPROV. BY: RKT	REV. DATE: 5-95

Back to page 1

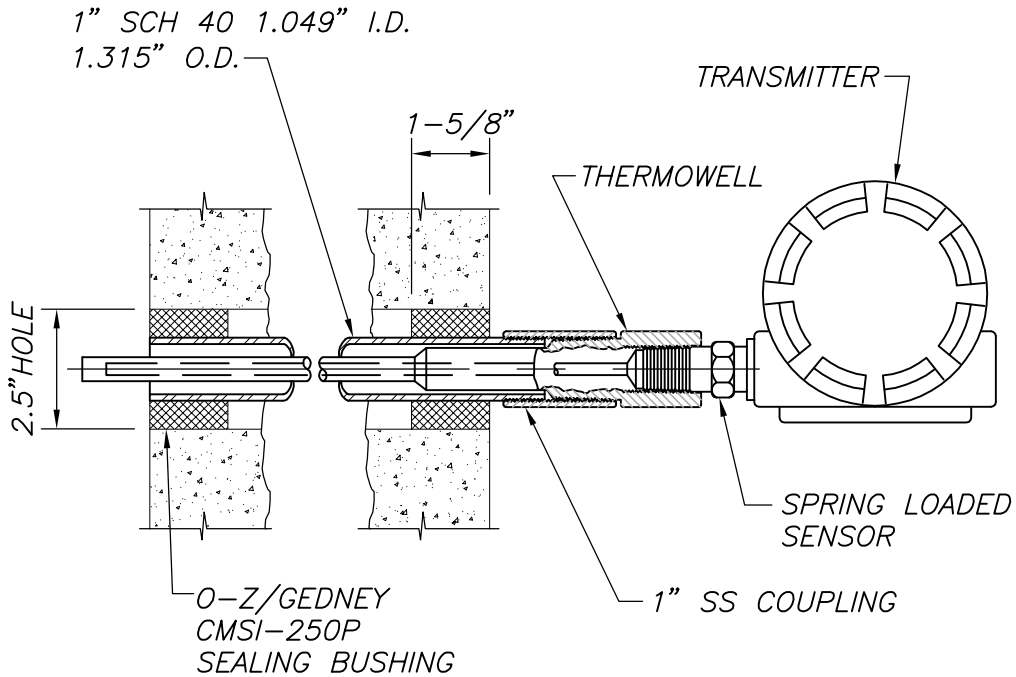

TEMPERATURE TRANSMITTER

SCALE: NTS	FILE NO. SD0070	APPROV. BY: RKT	REV. DATE: 6/15/99

Back to page 1

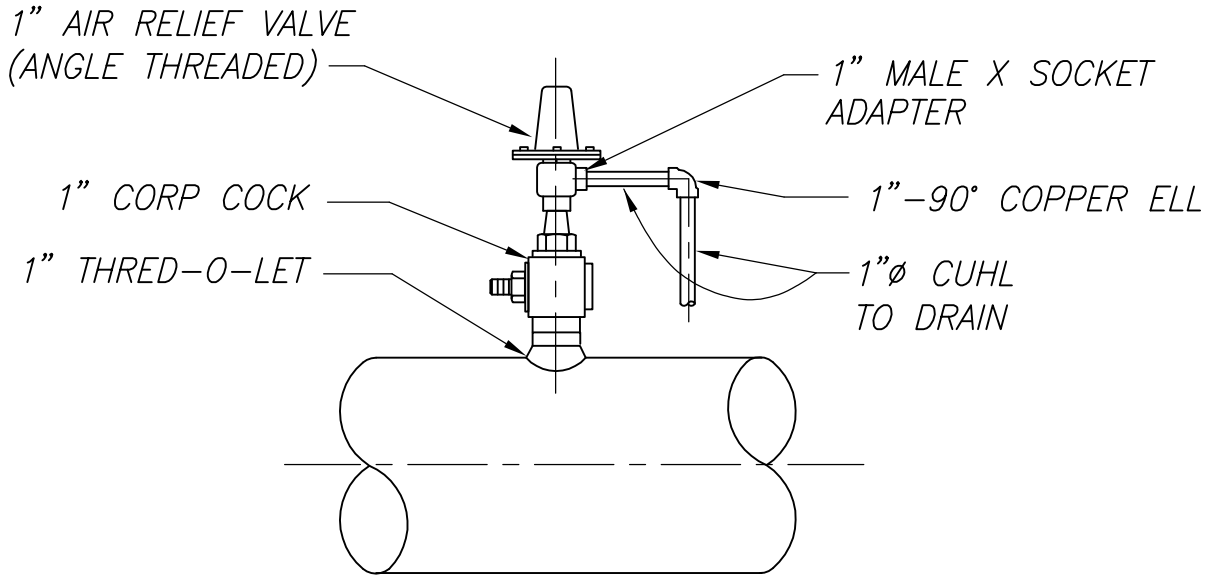

AIR RELIEF VALVE

SCALE:NTS	FILE NO. SD0071	APPROV. BY: RKT	REV. DATE: 4–29–95

Back to page 1

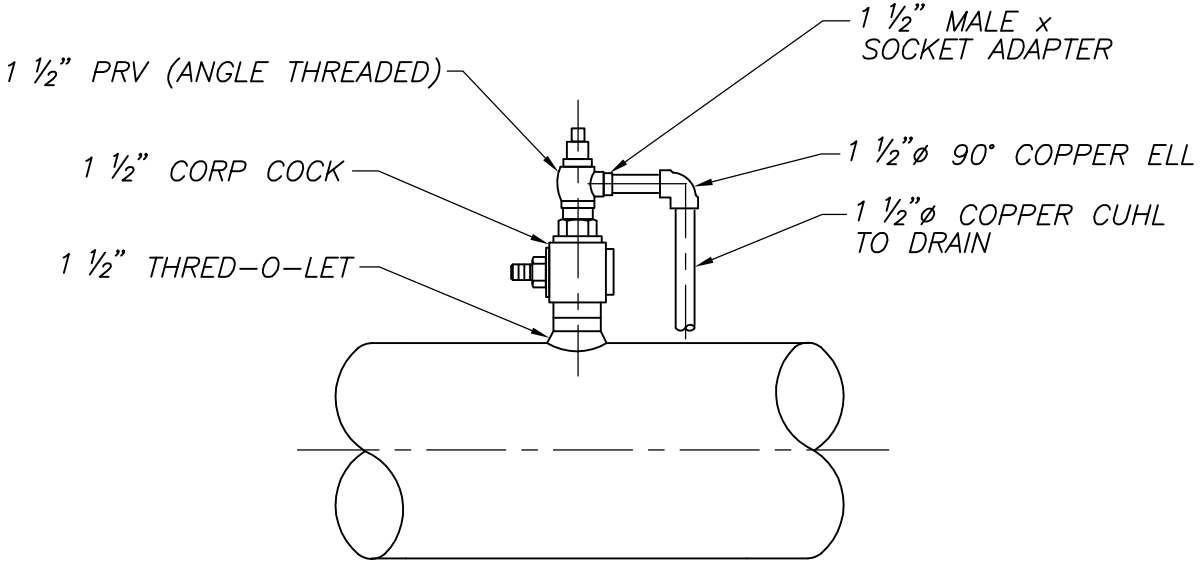

PRESSURE RELIEF VALVE

SCALE:NTS	FILE NO. SD0072	APPROV. BY: RKT	REV. DATE: 4–29–95

Back to page 1

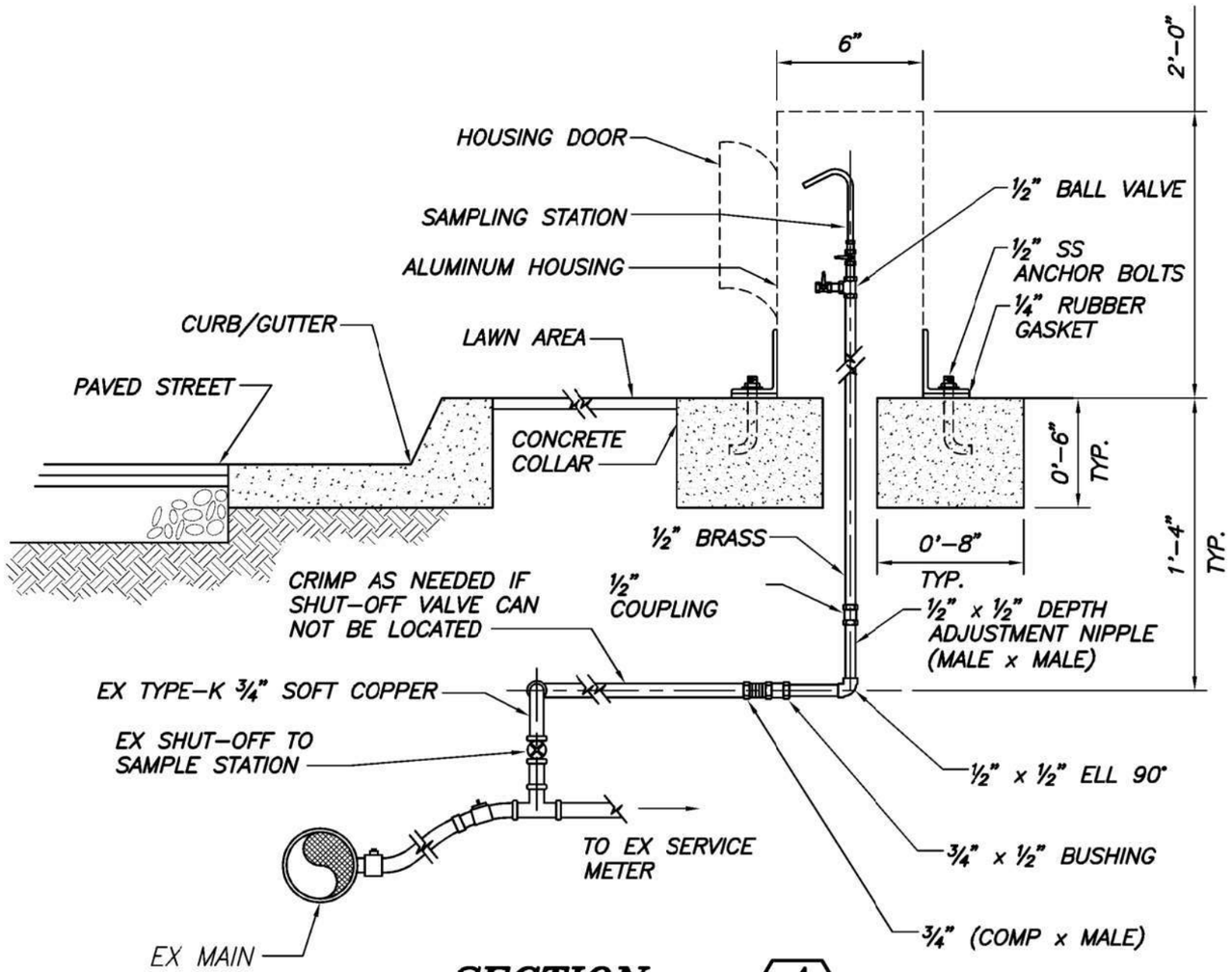

SECTION A

SCALE: NTS

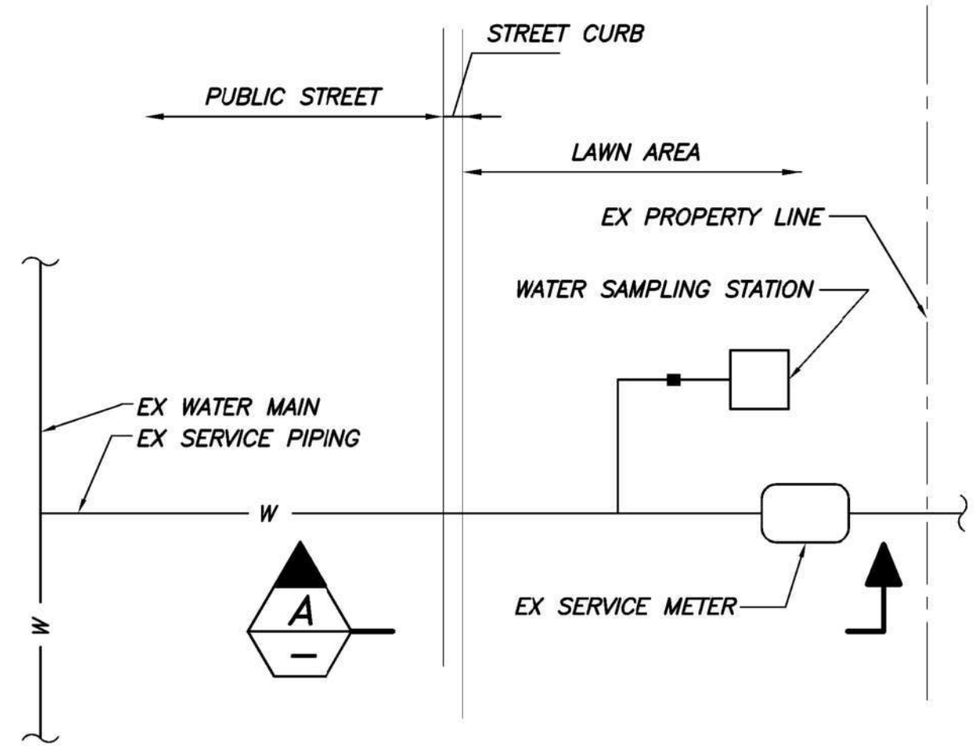

WATER SAMPLING STATION INSTALLATION PLAN

SCALE: NTS

Back to page 1

NOTES:

1. ALL FITTINGS SHALL BE BRASS.
2. MMWD SUPPLY SAMPLE STATION, HOUSING & FITTINGS.
3. CONTRACTOR MAY NEED TO EXTEND BURIED PIPING PRIOR TO SURFACING FOR BEST FIELD FIT.
4. BOLTS & GASKETS SHALL BE SUPPLIED BY CONTRACTOR.
5. INSTALLATION SHOWN IS "TYPICAL" ONLY – SOME ADJUSTMENTS MAYBE REQUIRED TO SUIT ACTUAL FIELD CONDITIONS.

WATER SAMPLING STATION

NO SCALE	FILE NO. SD0073	APPROV. BY: EA	REV. DATE: SEPT '16

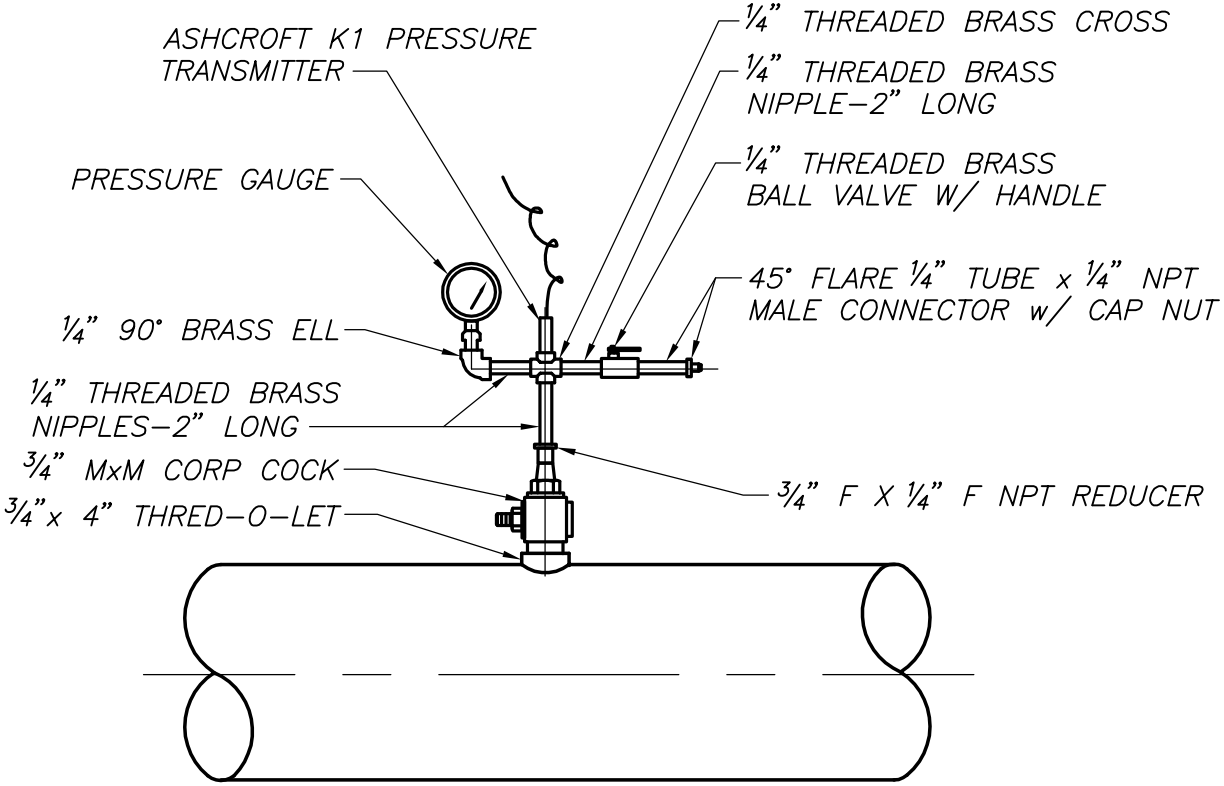

PRESSURE TRANSMITTER ASSEMBLY

SCALE:NTS	FILE NO. SD0075	APPROV. BY: RKT	REV. DATE: 5–29–96

Back to page 1

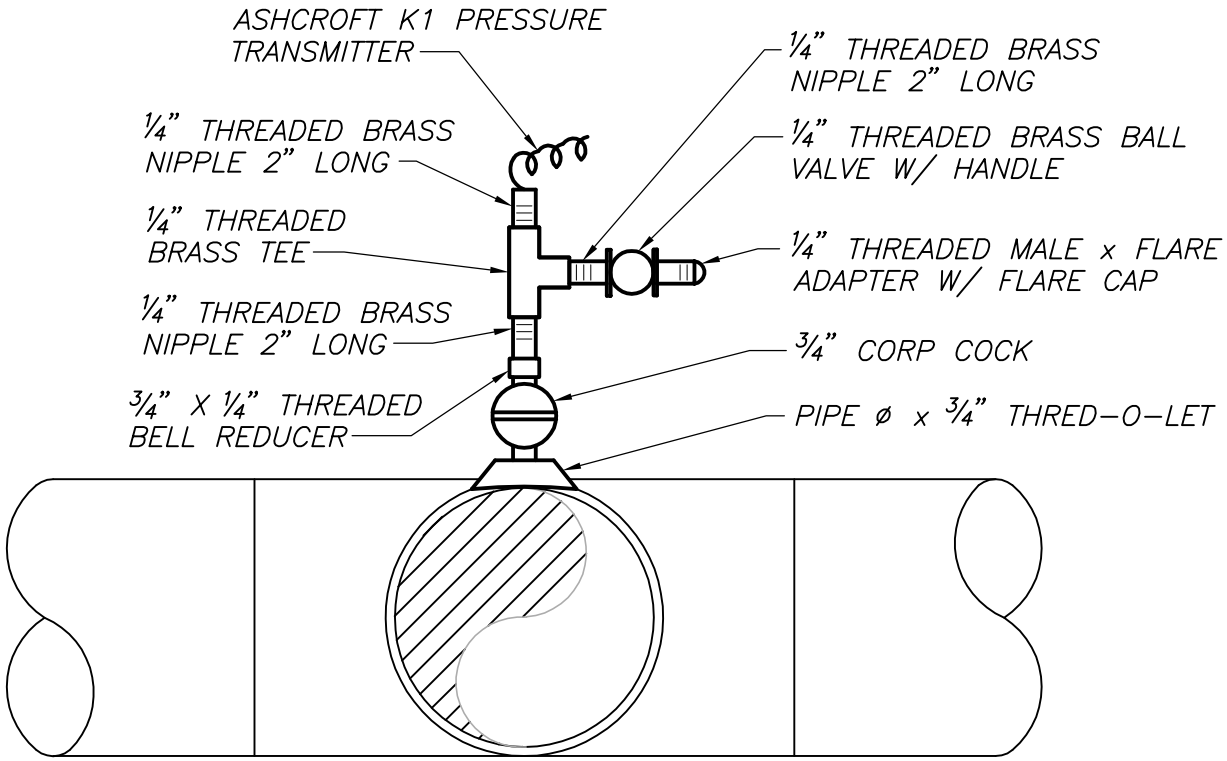

PRESSURE TRANSMITTER

SCALE:NTS	FILE NO. SD0076	APPROV. BY: RKT	REV. DATE: 5-29-95

Back to page 1

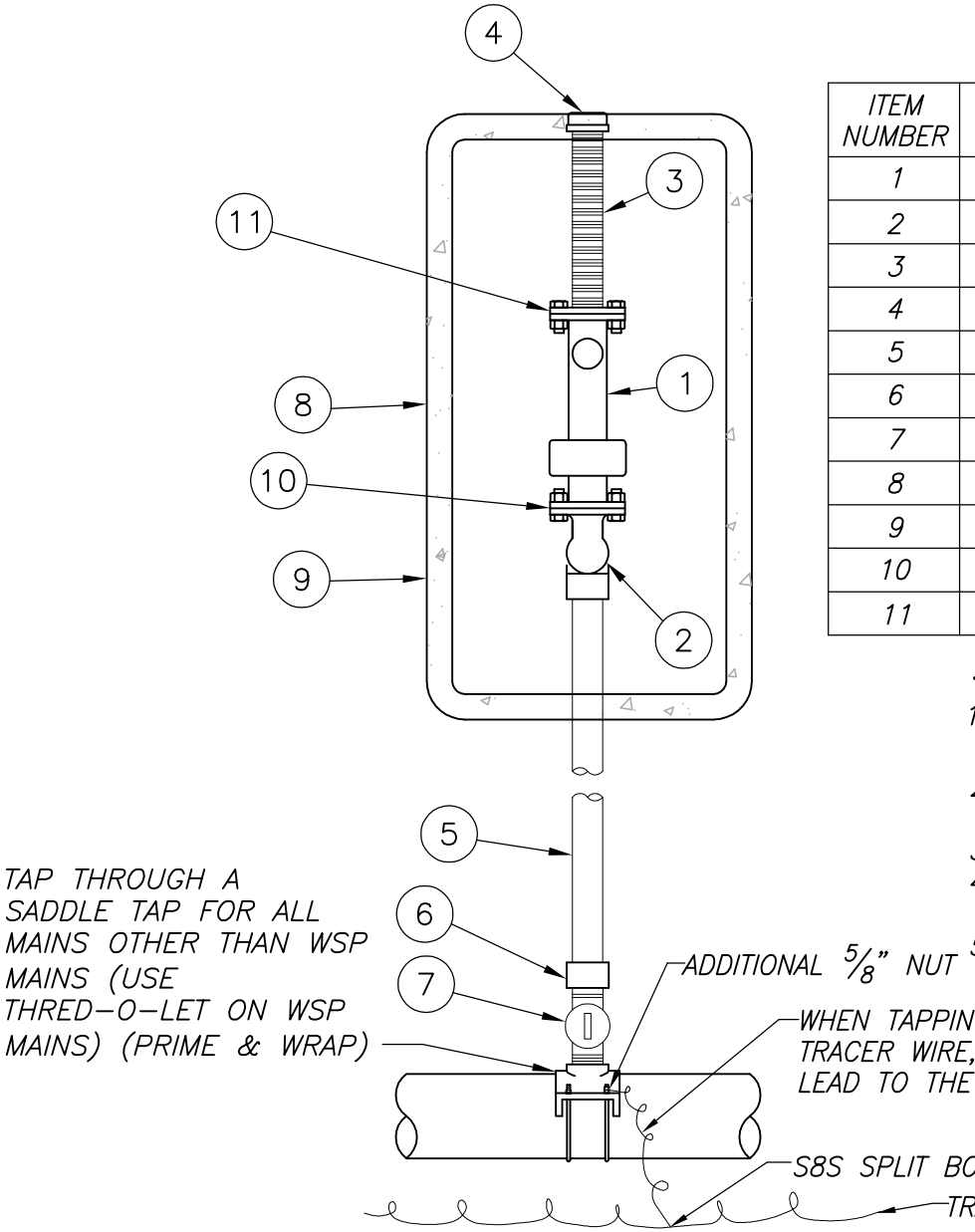

MATERIAL LIST

ITEM NUMBER	DESCRIPTION	NUMBER REQUIRED
1	2" FLANGED TURBO METER	1
2	2" COMP x FLG, ANGLE CURB COCK, MUELLER OR EQUAL	1
3	2" THREADED BRASS NIPPLE (10" LONG)	1
4	2" THREADED CAP	1
5	2" COPPER TUBING	
6	2" FPT x COMP COUPLING (H15451)	1
7	2" CORPORATION COCK (NO. 15023)	1
8	CHRISTY B-36 METER BOX WITH COVER	1
9	LUMBER BLOCKS (2x12 REDWOOD) (NOTE 5)	4
10	2" FLANGE INSULATING KIT	1
11	2" METER FLANGE	1

NOTES:

1. PRIME AND WRAP ALL BARE METAL IN CONTACT WITH GROUND EXCEPT METAL BONNET AND 3" CAP
2. INSTALL METER BOX 4" ABOVE FINISH GRADE IF IN PLANTER AREA.
3. BURY ANODE 2 FEET BELOW PIPE.
4. PROPER BACKFLOW PROTECTION MUST BE INSTALLED ON THE CONSUMER SIDE OF METER ASSEMBLY.
5. INSTALL REDWOOD BLOCKS UNDER METER BOX ALONG EACH EDGE, SIMILAR SERVICE METER BOX.

2" IRRIGATION METER

NO SCALE	FILE NO. SD0078	APPROV. BY: JM	REV. DATE: MAY '08

Back to page 1

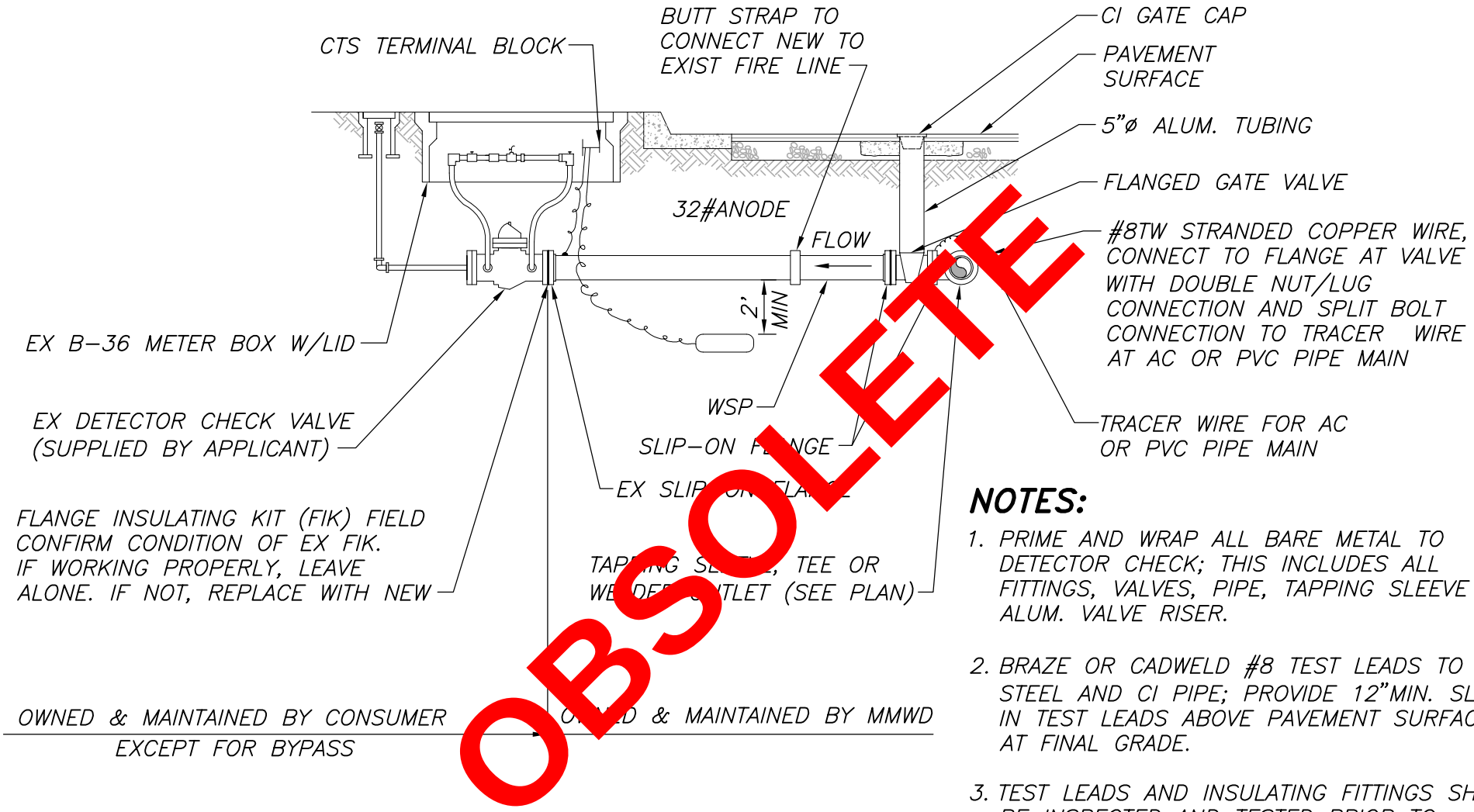

NOTES:

1. PRIME AND WRAP ALL BARE METAL TO DETECTOR CHECK; THIS INCLUDES ALL FITTINGS, VALVES, PIPE, TAPPING SLEEVE AND ALUM. VALVE RISER.
2. BRAZE OR CADWELD #8 TEST LEADS TO STEEL AND CI PIPE; PROVIDE 12"MIN. SLACK IN TEST LEADS ABOVE PAVEMENT SURFACE AT FINAL GRADE.
3. TEST LEADS AND INSULATING FITTINGS SHALL BE INSPECTED AND TESTED PRIOR TO BACKFILLING THE TRENCH.
4. CONSUMER PIPING DEPTH PER CALIFORNIA PLUMBING & NFPA CODE REQUIREMENTS.

FIRELINE TRANSFER CONNECTION

NO SCALE	FILE NO. SD0079	APPROV. BY: EA	REV. DATE: APR '16

Back to page 1

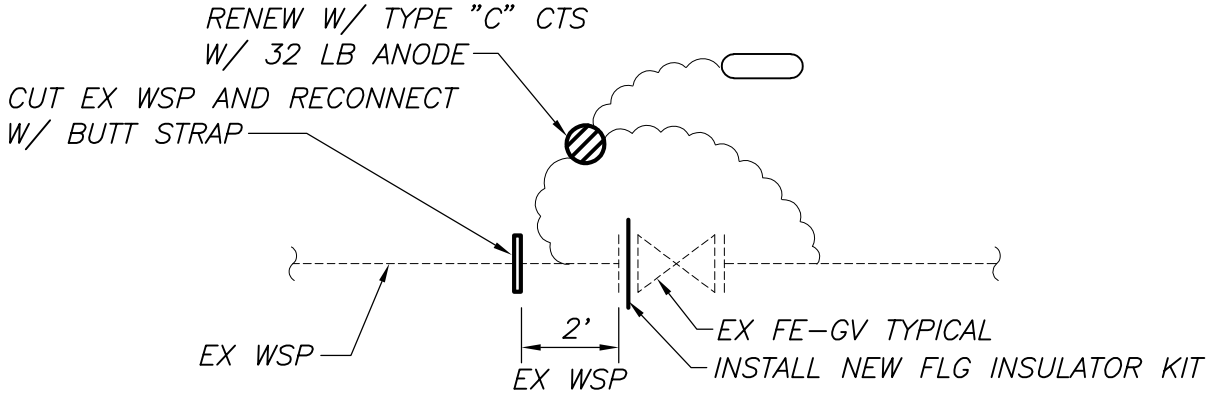

FLANGE INSULATING KIT INSTALLATION

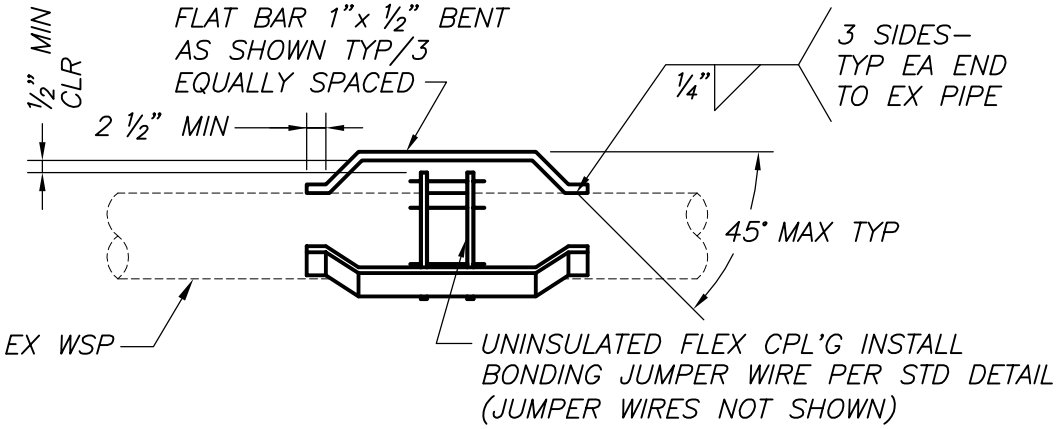

RESTRAINING STRAP DETAILS

NOTE:

WHEN CONNECTING TO CIP, DO NOT BOND MJ COUPLING TO #8 WIRE. WHEN CONNECTING TO WSP BOND MJ COUPLING TO #8 WIRE. WHEN CONNECTING TO ACP/PVC BOND MJ COUPLING TO TRACER WIRE.

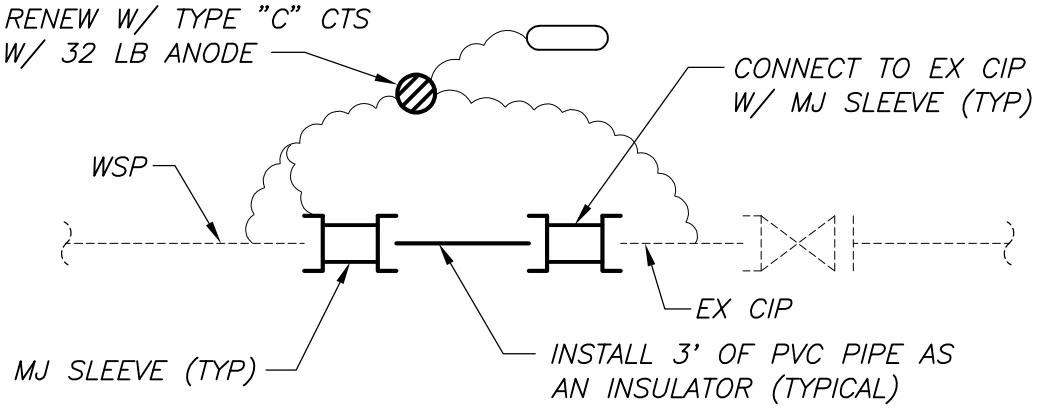

PVC INSULATOR INSTALLATION

INSULATING DETAILS WITH HARNESS

NO SCALE	FILE NO. SD0080	APPROV. BY: EI	REV. DATE: FEB. '19

Back to page 1

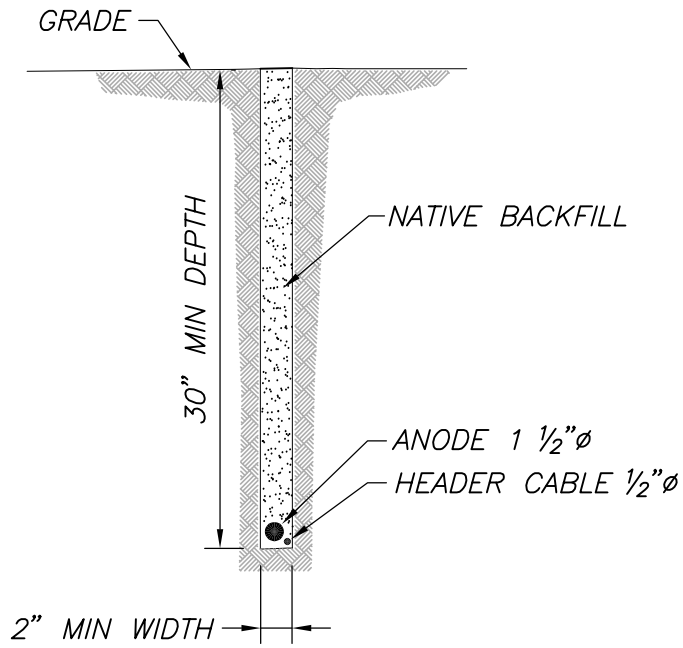

TYP ANODE TRENCH

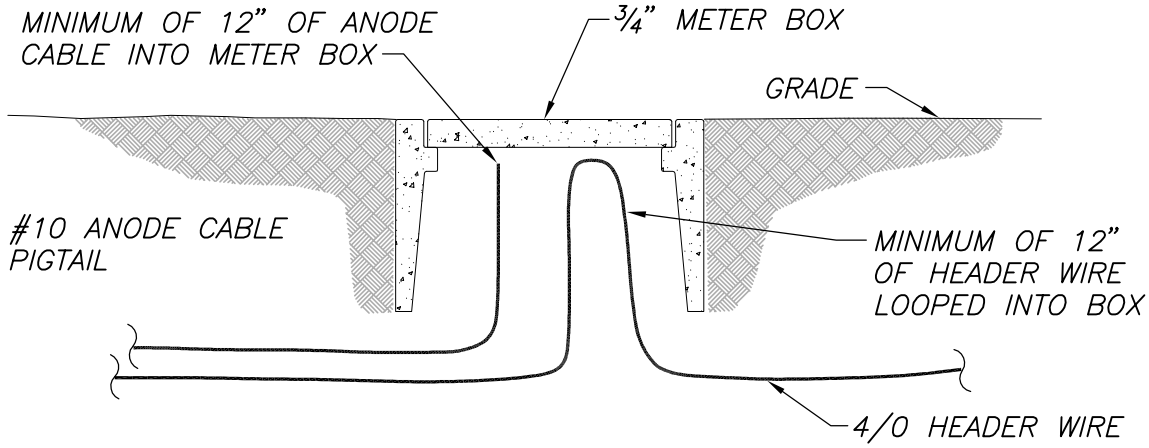

TYP SPLICE BOX DETAIL

SCALE: NTS	FILE NO. SD0081	APPROV. BY: RKT	REV. DATE: 9/22/98

Back to page 1

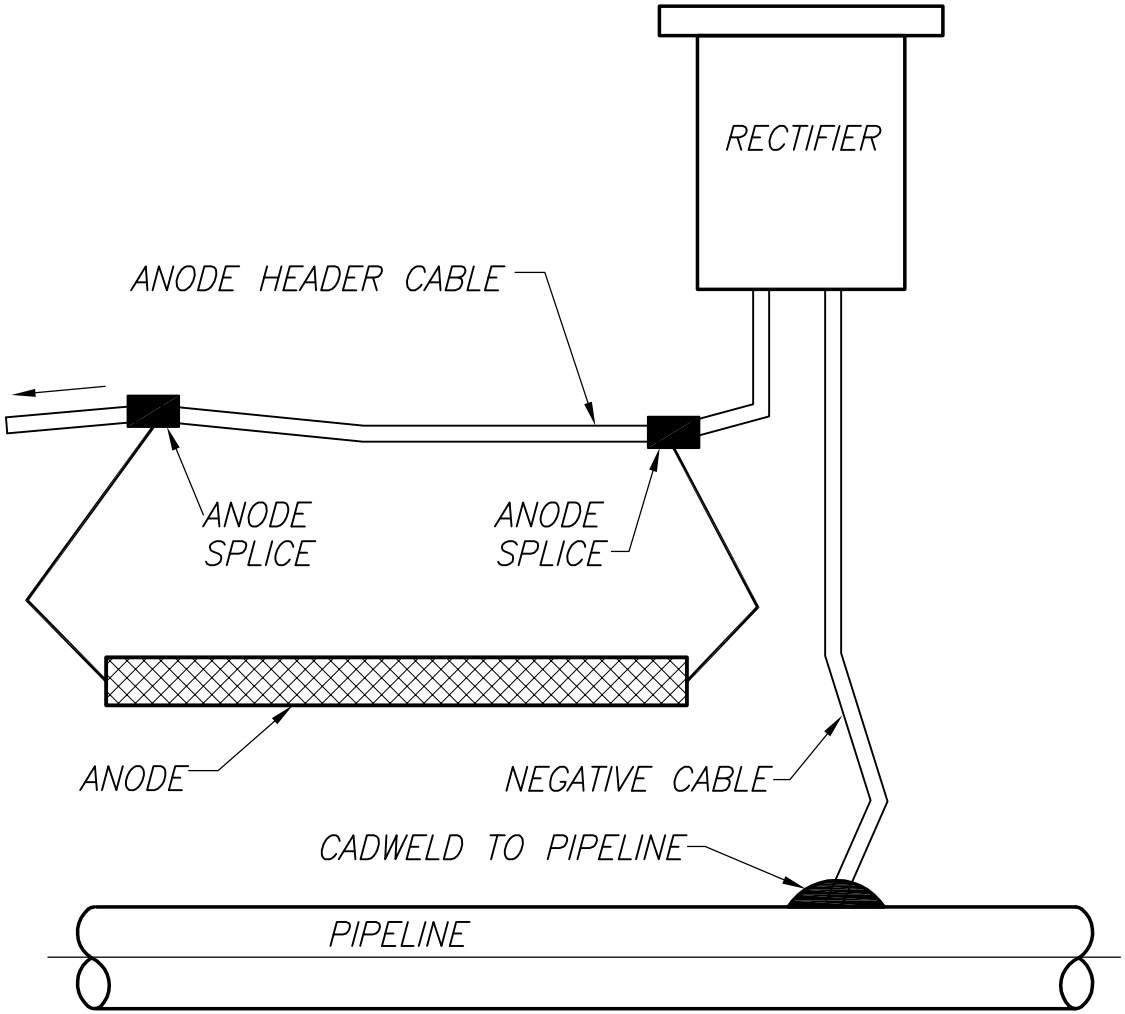

RECTIFIER INSTALLATION FOR PIPELINE

SCALE: NTS	FILE NO. SD0082	APPROV. BY: RKT	REV. DATE: 9/22/98

Back to page 1

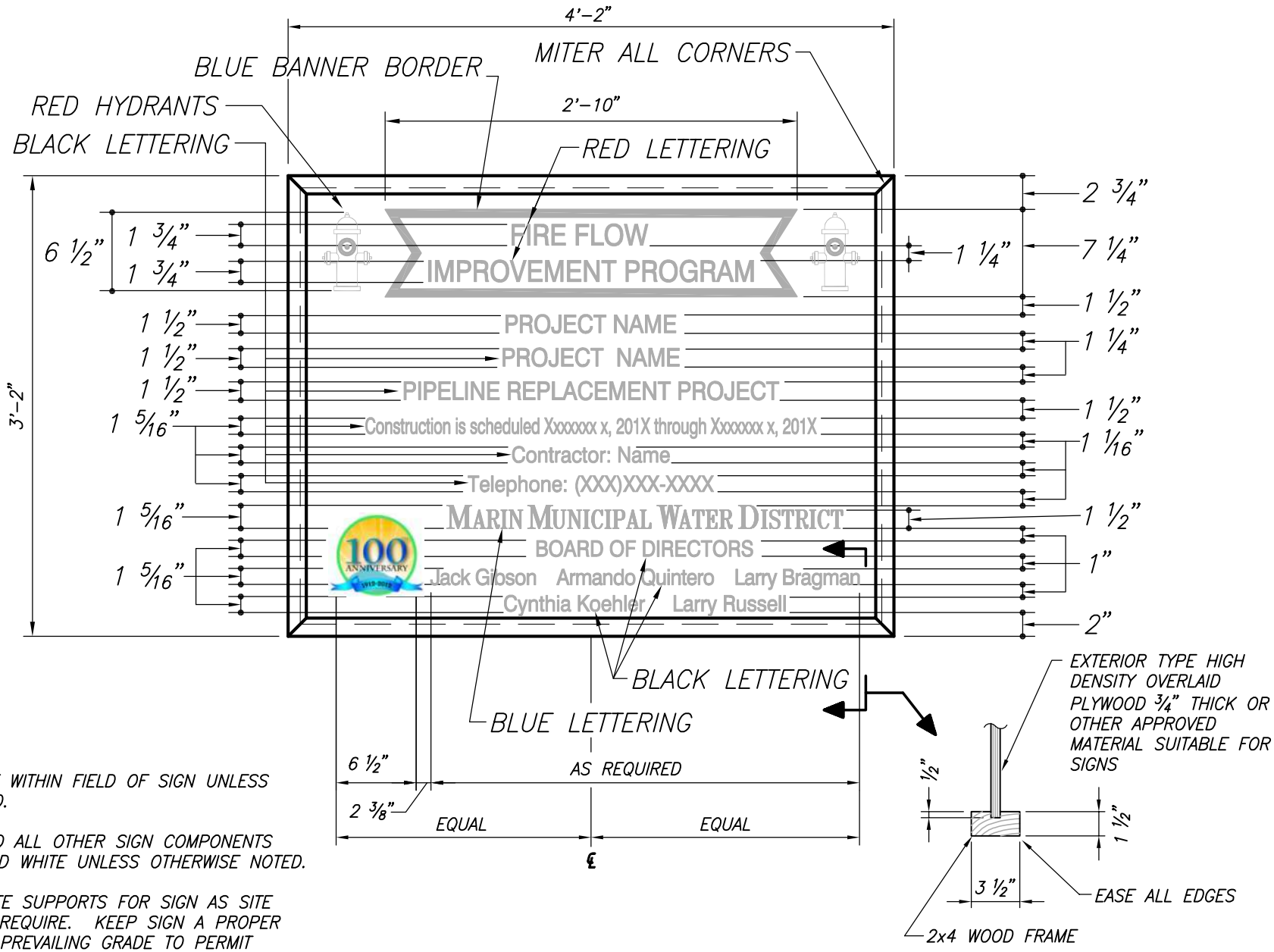

NOTES:

1. CENTER ALL TEXT WITHIN FIELD OF SIGN UNLESS OTHERWISE NOTED.
2. BACKGROUND AND ALL OTHER SIGN COMPONENTS SHALL BE PAINTED WHITE UNLESS OTHERWISE NOTED.
3. PROVIDE ADEQUATE SUPPORTS FOR SIGN AS SITE CONDITIONS MAY REQUIRE. KEEP SIGN A PROPER DISTANCE ABOVE PREVAILING GRADE TO PERMIT PUBLIC VIEWING.
4. THE CONTRACTOR SHALL PROVIDE & ERECT THE PROJECT SIGN CONFORMING TO THESE DETAILS & AT THE LOCATION SHOWN ON THE CONTRACT DRAWINGS. THE CONTRACTOR SHALL SUBMIT FINAL SIGN LAYOUT TO THE ENGINEER PRIOR TO FABRICATION.

FIREFLOW PROJECT SIGN DETAIL

SCALE: NTS	FILE NO. SD0083	APPROV. BY: MB	REV. DATE: FEB '15

Back to page 1

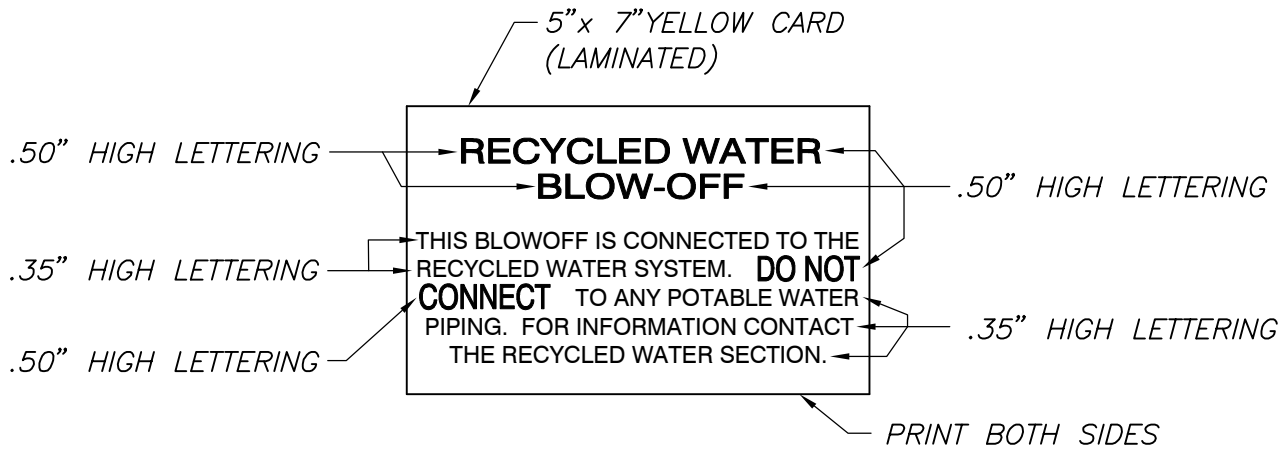

I.D. TAG DETAIL

NO SCALE	FILE NO. SD0084	APPROV. BY: KF	REV. DATE: FEB '10

Back to page 1

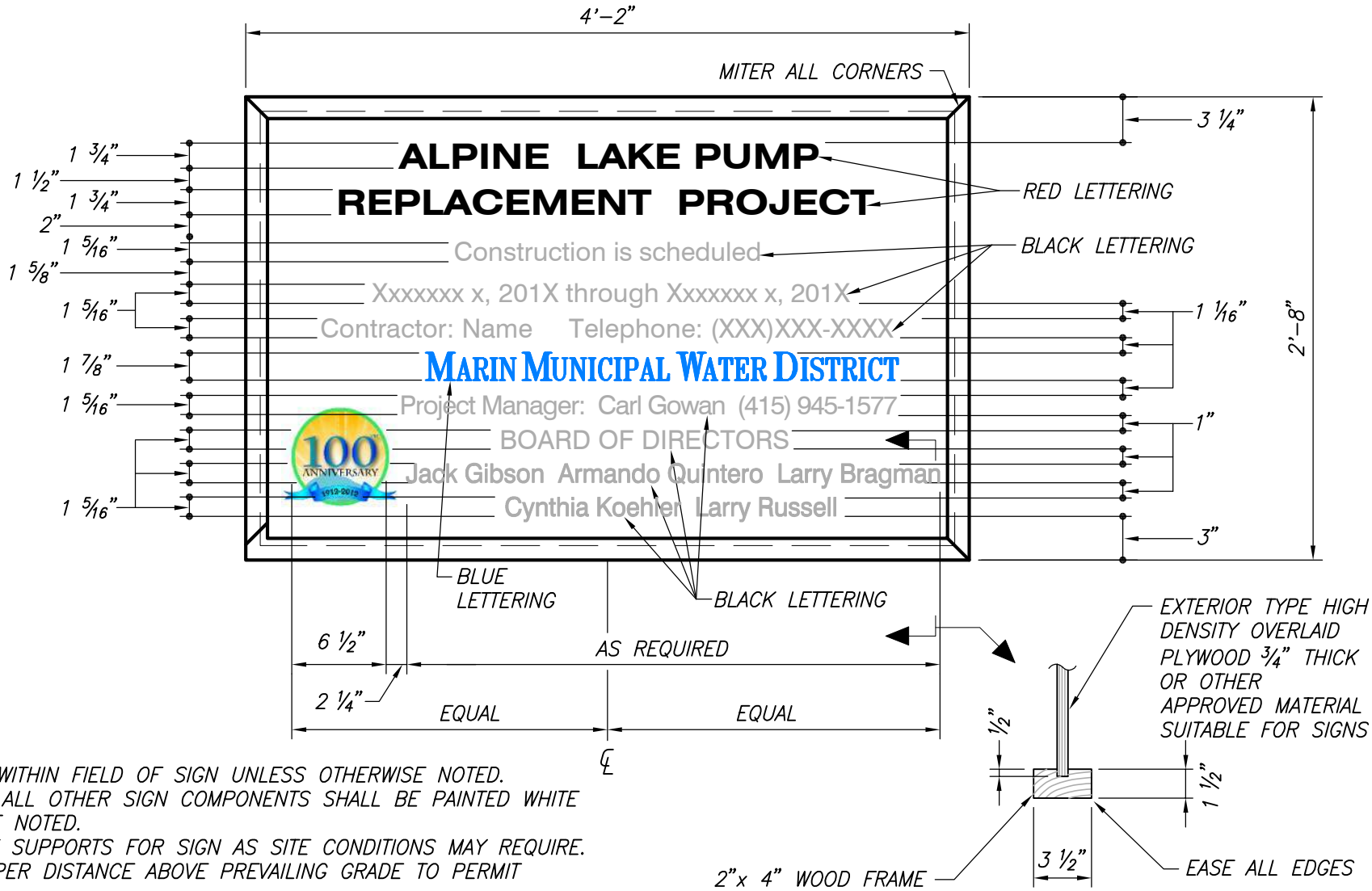

NOTES:

1. CENTER ALL TEXT WITHIN FIELD OF SIGN UNLESS OTHERWISE NOTED.
2. BACKGROUND AND ALL OTHER SIGN COMPONENTS SHALL BE PAINTED WHITE UNLESS OTHERWISE NOTED.
3. PROVIDE ADEQUATE SUPPORTS FOR SIGN AS SITE CONDITIONS MAY REQUIRE. KEEP SIGN A PROPER DISTANCE ABOVE PREVAILING GRADE TO PERMIT PUBLIC VIEWING.
4. THE CONTRACTOR SHALL PROVIDE & ERECT THE PROJECT SIGN CONFORMING TO THESE DETAILS & AT THE LOCATION SHOWN ON THE CONTRACT DRAWINGS. THE CONTRACTOR SHALL SUBMIT FINAL SIGN LAYOUT TO THE ENGINEER PRIOR TO FABRICATION.

PROJECT SIGN DETAIL

SCALE: NTS	FILE NO. SD0085	APPROV. BY: MV	REV. DATE: FEB '13

Back to page 1

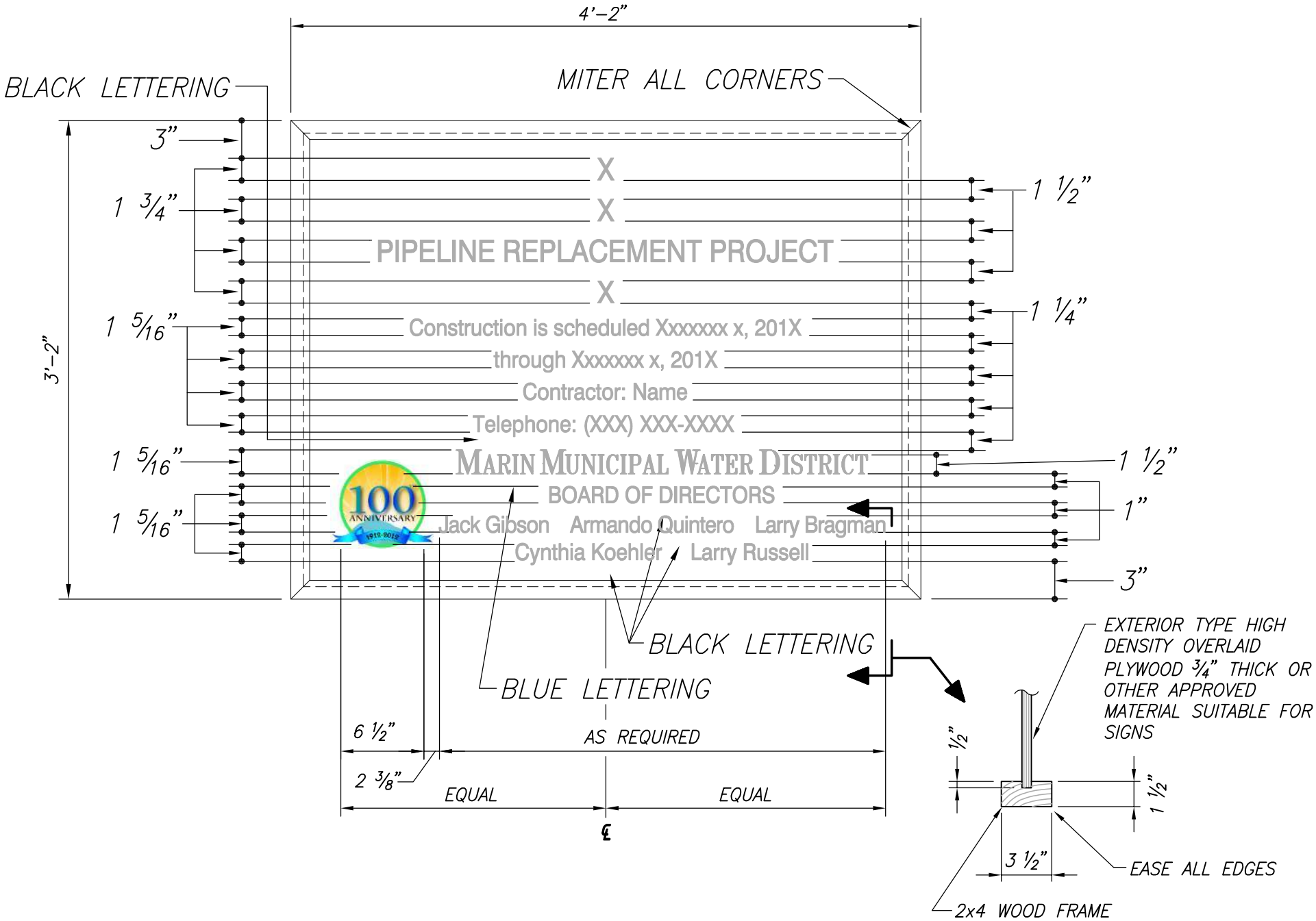

REHAB PROJECT SIGN DETAIL

SCALE: NTS	FILE NO. SD0087	APPROV. BY: JM	REV. DATE: FEB '13

Back to page 1

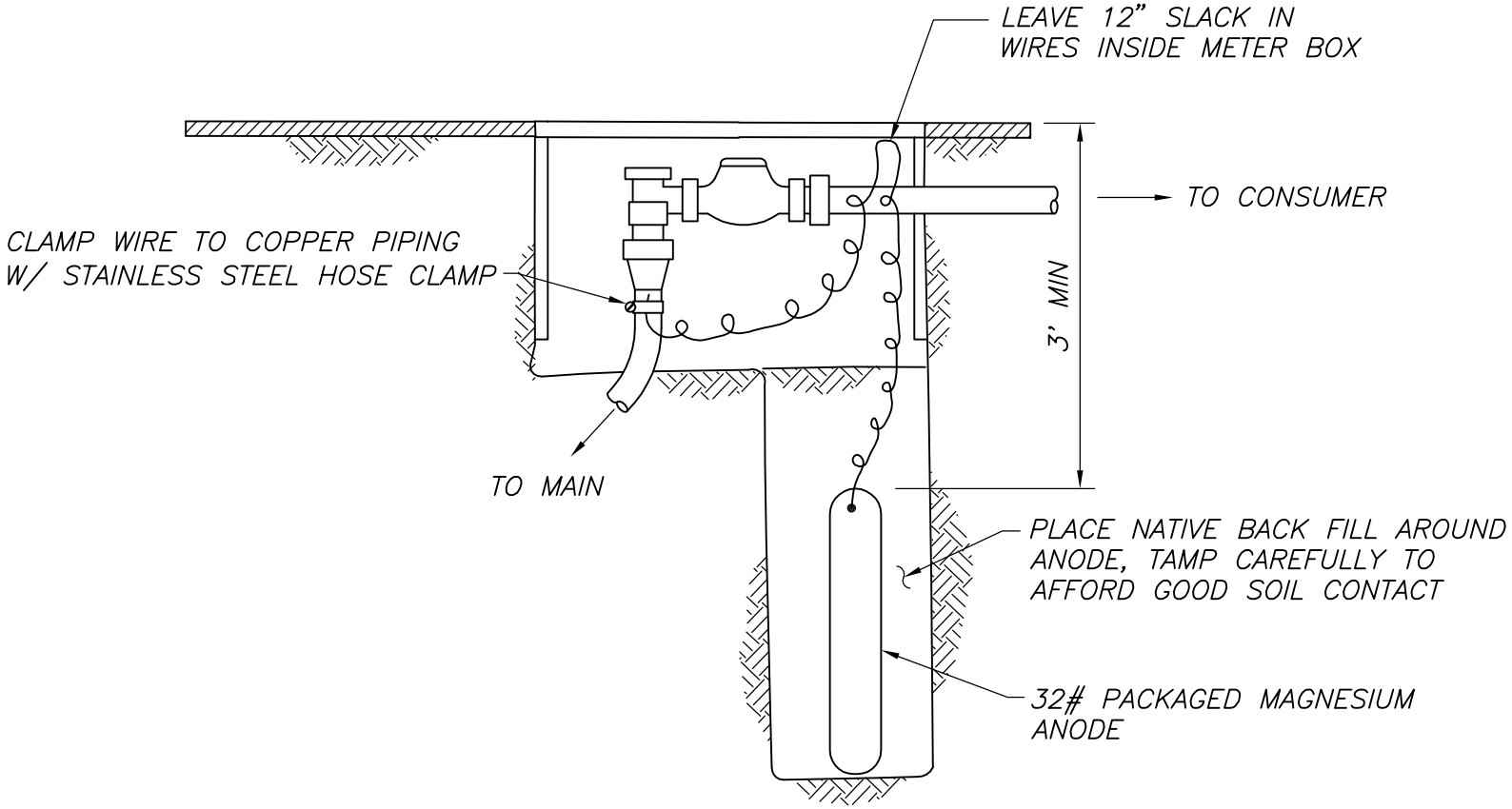

METER BOX WITH MAGNESIUM ANODE

NO SCALE	FILE NO. SD0088	APPROV. BY: RKT	REV. DATE:

Back to page 1

NOTES:

1. CONSUMER SHALL MARK LOCATION FOR PROPOSED ASSEMBLY FOR MMWD REVIEW & APPROVAL. ALL MMWD PIPING MUST BE IN THE PUBLIC EASEMENT. ASSEMBLY SHALL HAVE 12" CLEAR ALL AROUND. METER SHALL BE IN ACCESSIBLE LOCATION.
2. CONSUMER FURNISHED APPROVED BACKFLOW ASSEMBLY MUST BE ON SITE FOR MMWD INSPECTION PRIOR TO ANY MMWD PIPING INSTALLATION.
3. WRAP ALL BARE METAL BELOW GROUND.
4. CHLORINATE & TEST PRIOR TO CONNECTION.
5. TEST CORROSION SYSTEM PRIOR TO CONNECTION.
6. HOT TAP OF EX MAIN TO BE COORDINATED WITH MMWD.
7. MMWD WILL NOT TURN ON FIRELINE UNTIL FINAL PAVING & SIDEWALKS ARE COMPLETE.

(1) 32# MAGNESIUM ANODE WITH PACKAGED BACKFILL W/ WIRE (N).

(2) SLIP-ON FLANGE (EX)

(3) WELDED STEEL PIPE (EX)

(4) HDPE SPOOL KIT (CONTRACTOR INSTALLED)

PLEASE NOTE & PLAN ACCORDINGLY: THE SPOOL KIT DOES NOT HAVE THE SAME LAY LENGHT AS THE CHECK VALVE.

(5) "TYPE B" CTS, B-9 METER BOX

(6) #8 THWN STANDARD COPPER WIRE (E)

(7) CUSTOMER SIDE CUT & CONNECTION ONLY

(8) 5/8" x 3/4" METER (SALVAGE TO MMWD)

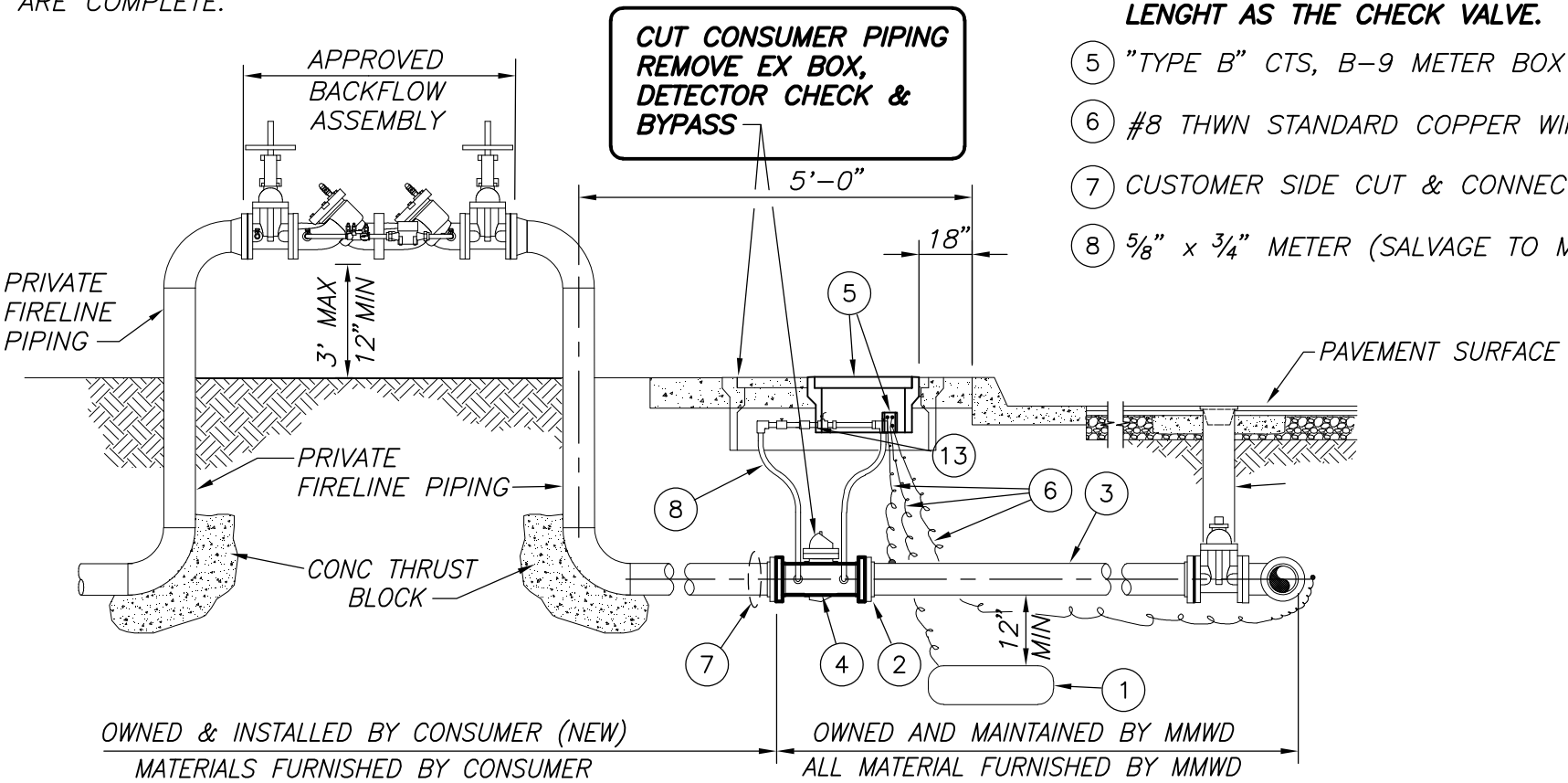

FIRELINE RETROFIT WSP
BELOW TO ABOVE GROUND BACKFLOW

NO SCALE	FILE NO. SD0089	APPROV. BY: DS	REV. DATE: APR '18

Back to page 1

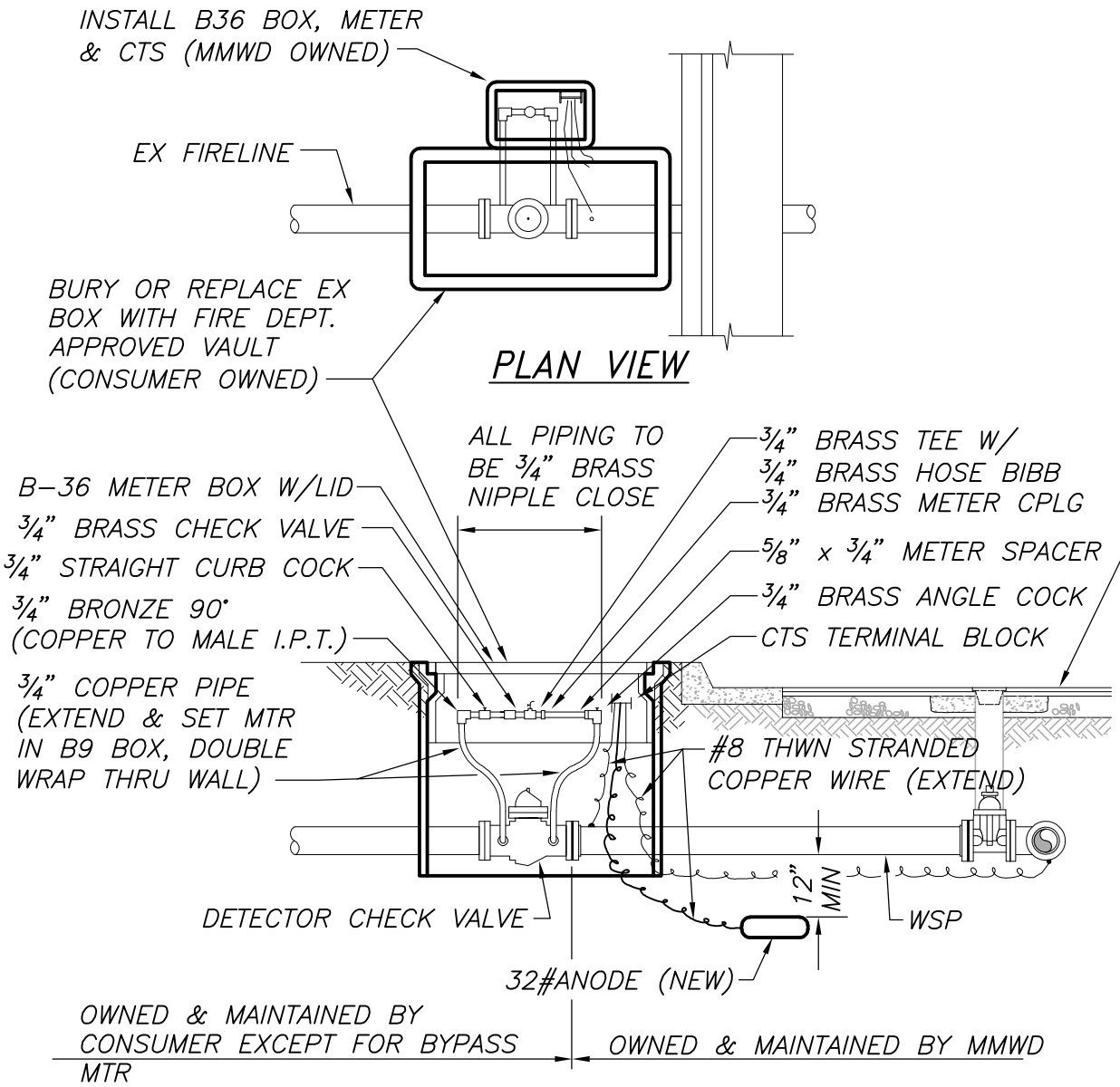

NOTES:

1. THE METER BOX IS TO BE LOCATED TO SIDE OF THE DETECTOR CHECK VALVE BOX. IF THIS IS NOT POSSIBLE OR DESIRABLE, HAVE MMWD APPROVE ALTERNATIVE LOCATION BEFORE PROCEEDING.
2. WRAP ALL BARE METAL. INSTALL NEW ANODE.
3. TEST LEADS AND INSULATING FITTINGS SHALL BE INSPECTED AND TESTED PRIOR TO COMPLETION.
4. THE HOSE BIB IS TO ALLOW TESTING OF METER & TESTING OF THE CHECK VALVES.

FIRELINE, INSPECTION & METER RETROFIT

NO SCALE	FILE NO. SD0090	APPROV. BY: EI	REV. DATE: FEB '18

Back to page 1

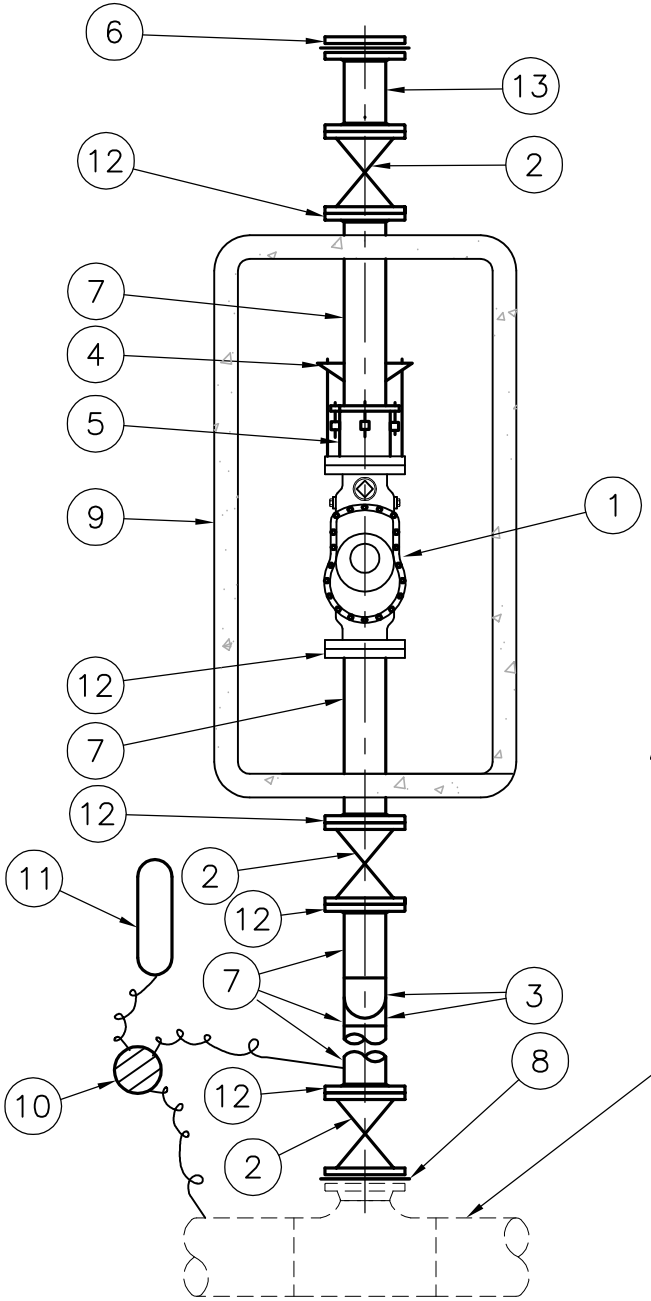

MATERIAL LIST		
ITEM NO	DESCRIPTION	NO. REQUIRED
1	4" FLANGED COMPOUND METER	1
2	4" FLANGED GATE VALVE	3
3	4" 90° WELD ELL	2
4	HARNESS (2 RODS & 2 EARS–SEE DETAIL SD0014)	1
5	4" FLANGE COUPLING ADAPTER	1
6	4" BLIND FLG	1
7	4" WELDED STEEL PIPE	
8	4" FLANGE INSULATING KIT	1
9	CHRISTY B–52 METER BOX AND B52–62G STEEL COVER (SET ON REDWOOD BLOCK)	1
10	TYPE "C"CTS (SEE DETAIL SD0009)	1
11	32# PACKAGED ANODE	1
12	4" SLIP–ON FLANGE	5
13	HDPE SPOOL KIT	1

NOTES:

1. PRIME AND WRAP ALL BARE METAL IN CONTACT WITH GROUND EXCEPT METAL BONNET AND 4" BLIND FLG.
2. INSTALL METER BOX 4" ABOVE FINISH GRADE IF IN PLANTER AREA.

WHEN TAPPING PVC, AC OR CI PIPE, USE TEE OR TAPPING SLEEVE. CONNECT TRACER WIRE TO SADDLE WITH A LEAD.

4" TURBINE METER

NO SCALE	FILE NO. SD0091	APPROV. BY: KMcD	REV. DATE: 7–5–11

Back to page 1

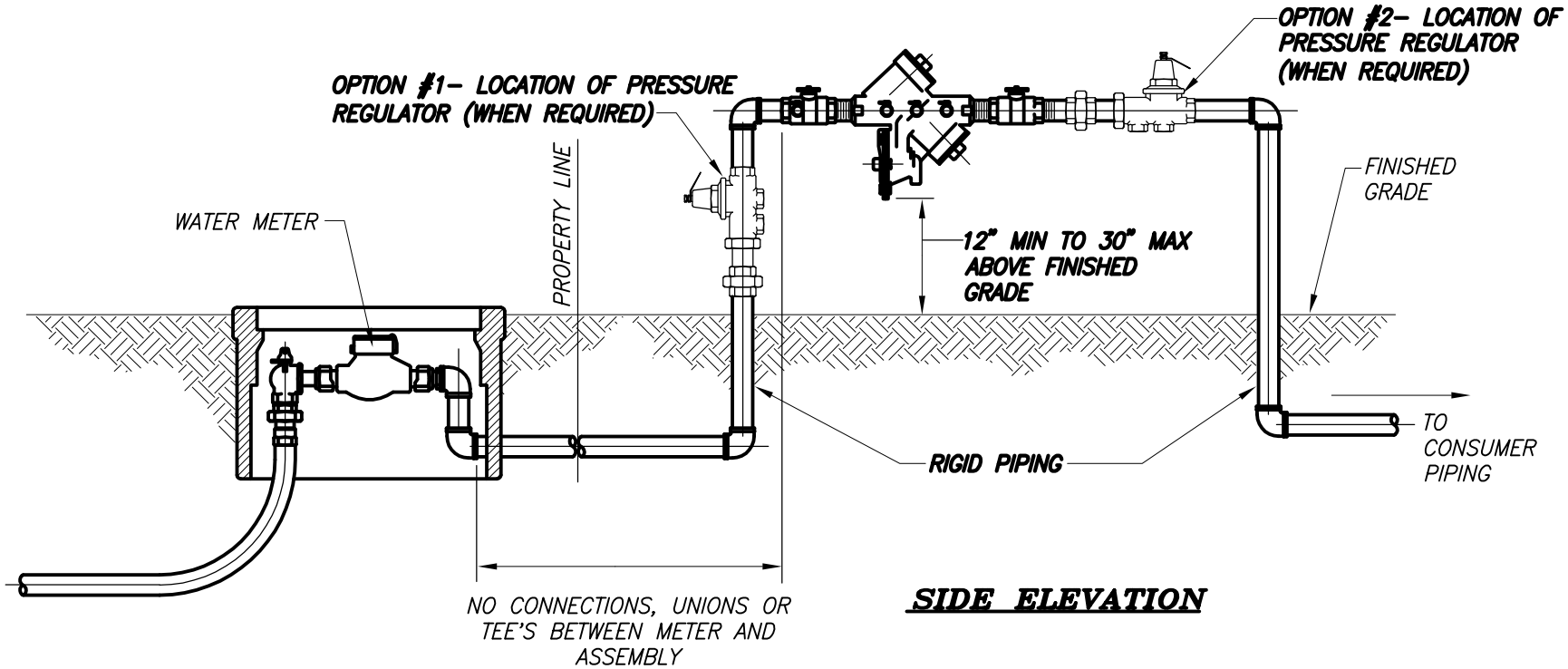

SIDE ELEVATION

NOTES:

1. Backflow prevention assemblies shall be only those approved by the District.
2. Any deviation from the methods described herein must receive approval prior to installation.
3. Backflow prevention assemblies shall be installed on the customer's property, at the meter, in an orientation shown on the MMWD Approved Assembly List with 12 inches clearance completely around the assembly to allow for testing and maintenance.

   No outlets, tees, taps, by-passes other connections, temporary or permanent shall be installed between the water meter and the backflow prevention assembly. Wye strainer with plugged tap (no method to flush allowed), pressure reducing valve and union may be installed before the backflow prevention assembly. All other appurtenances shall be installed downstream.
4. Alternate installation locations or arrangements shall be reviewed and approved by the District prior to installation.

SPECIAL NOTES:

1. Installation of a backflow prevention assemblies creates a closed water system. Thermal expansion protection is required by the California Plumbing Code.
2. Where necessary the backflow prevention assembly should be protected from vehicle or freeze damage.
3. Water services which cannot be turned off for short durations should have backflow prevention assemblies installed in parallel.
4. Please see the California Plumbing Code for other aspects of installation requirements.

BACKFLOW ASSEMBLY STANDARD INSTALLATION DIAGRAM

NO SCALE	FILE NO. SD0092	APPROV. BY: DS	REV. DATE: APR '12

Back to page 1

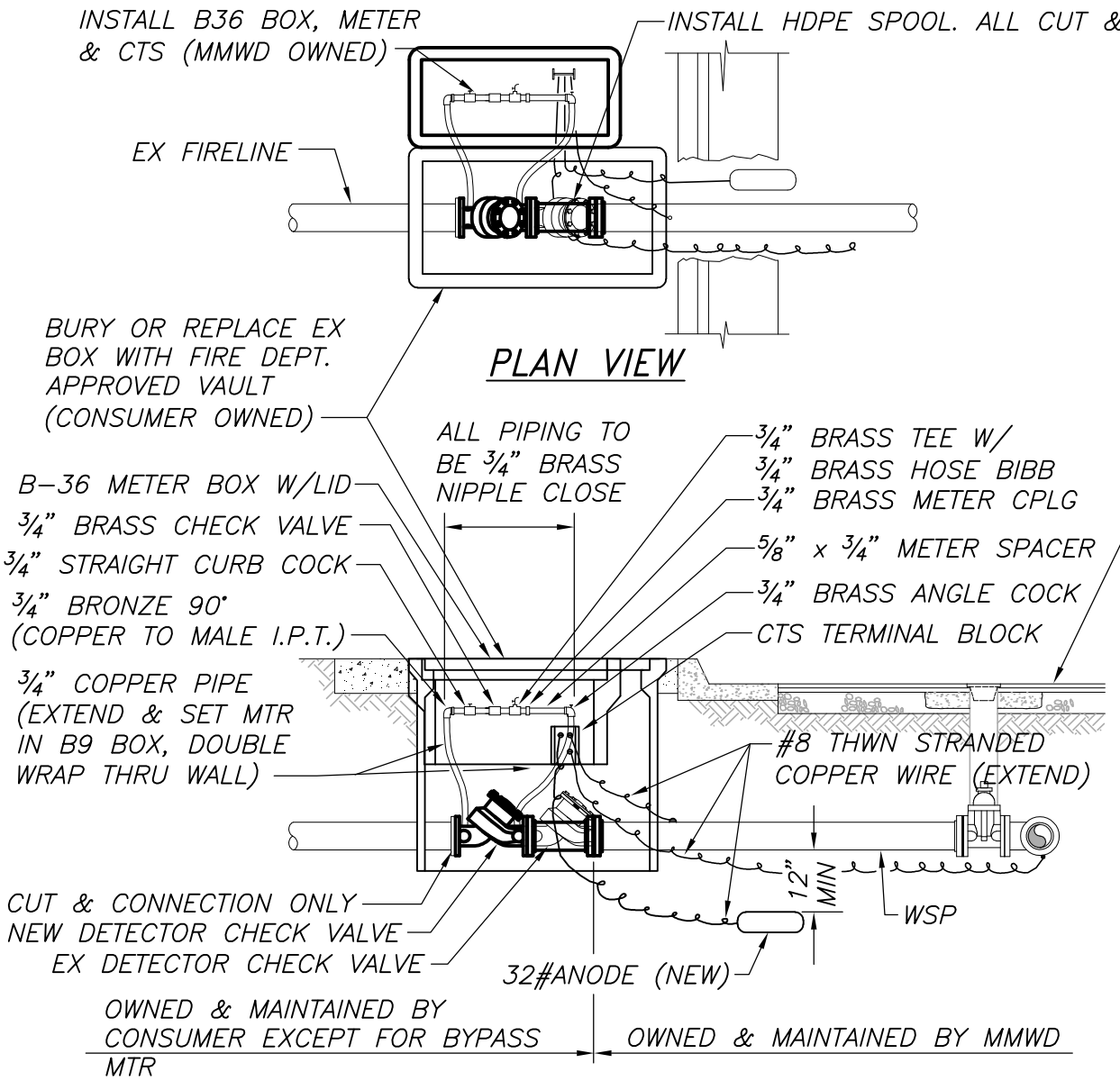

NOTES:

1. THE METER BOX IS TO BE LOCATED TO SIDE OF THE DETECTOR CHECK VALVE BOX. IF THIS IS NOT POSSIBLE OR DESIRABLE, HAVE MMWD APPROVE ALTERNATIVE LOCATION BEFORE PROCEEDING.
2. WRAP ALL BARE METAL. INSTALL NEW ANODE.
3. TEST LEADS AND INSULATING FITTINGS SHALL BE INSPECTED AND TESTED PRIOR TO COMPLETION.
4. THE HOSE BIB IS TO ALLOW TESTING OF METER & TESTING OF THE CHECK VALVES.

FIRELINE, INSPECTION & INSULATION RETROFIT

NO SCALE	FILE NO. SD0093	APPROV. BY: EI	REV. DATE: FEB '18

Back to page 1

NOTES:

1. CONSUMER SHALL MARK LOCATION FOR PROPOSED ASSEMBLY FOR MMWD REVIEW & APPROVAL. ALL MMWD PIPING MUST BE IN THE PUBLIC EASEMENT. ASSEMBLY SHALL HAVE 12" CLEAR ALL AROUND. METER SHALL BE IN ACCESSIBLE LOCATION.
2. CONSUMER FURNISHED APPROVED BACKFLOW ASSEMBLY MUST BE ON SITE FOR MMWD INSPECTION PRIOR TO ANY MMWD PIPING INSTALLATION. THRUST BLOCKS REQUIRED.
3. WRAP ALL BARE METAL BELOW GROUND.
4. CHLORINATE & TEST PRIOR TO CONNECTION.
5. TEST CORROSION SYSTEM PRIOR TO CONNECTION.
6. HOT TAP OF EX MAIN TO BE COORDINATED WITH MMWD.
7. MMWD WILL NOT TURN ON FIRELINE UNTIL FINAL PAVING & SIDEWALKS ARE COMPLETE.
8. CONSUMER PIPING DEPTH PER CALIFORNIA PLUMBING & NFPA CODE REQUIREMENTS.

MMWD FURNISHED MATERIAL

1. 2" HDPE SPOOL KIT. SEE TORQUE SPEC.
2. 2" COMPANION BRASS FLANGE
3. 2"x 4" BRASS NIPPLE
4. 2" BRASS ANGLE STOP
5. 2" COPPER PIPE
6. 2" CORP VALVE (MIPxCOMP)
7. 2" TAPPING SLEEVE, TEE OR THRED-O-LET
8. 2-BOLT 2" METER BRASS FLANGES W/ SS BOLTS
9. B36 METER BOX
10. #8 TW STANDARD COPPER WIRE
11. #S8S SPLIT BOLT CONNECTOR
12. 32# MAGNESIUM ANODE WITH PACKAGED BACKFILL W/ WIRE
13. 2 PIECE PHENOLIC TERMINAL BLOCK
14. OWNED AND MAINTAINED BY MMWD. ALL MATERIAL FURNISHED BY MMWD. RENEW, EXTENT OF WORK

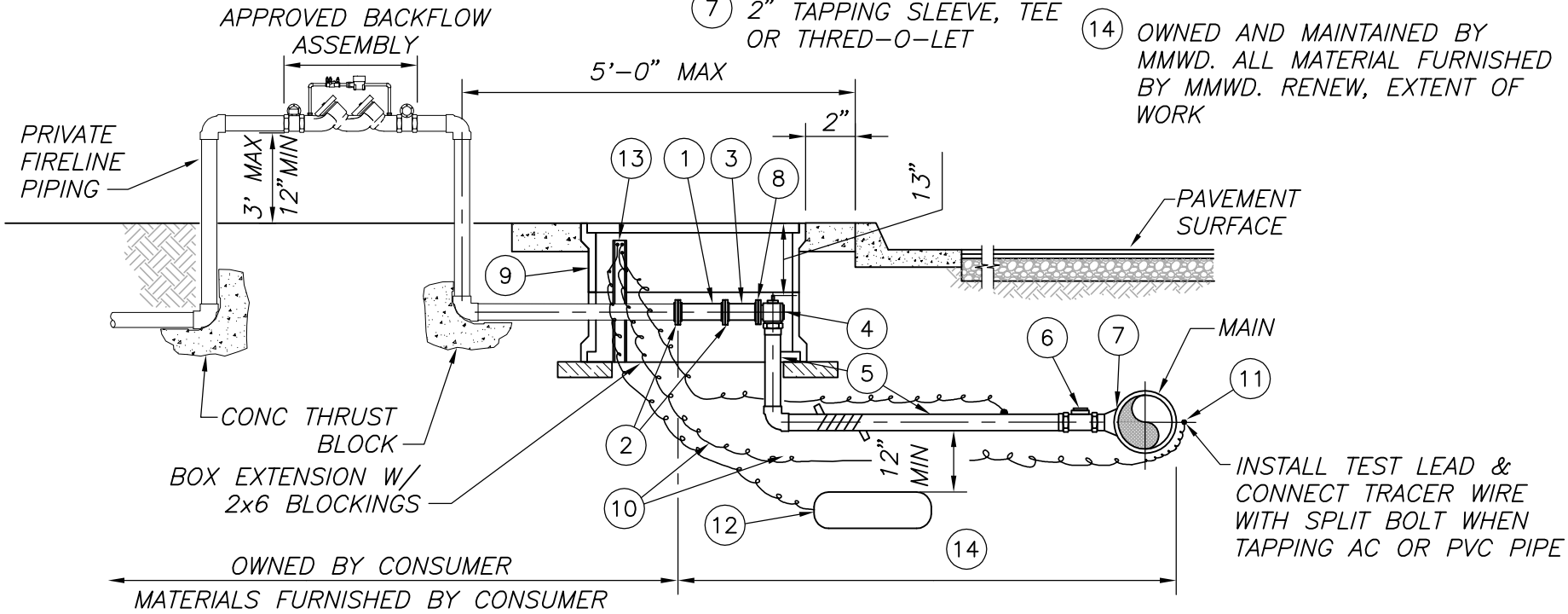

2" FIRELINE, NEW & RENEW

NO SCALE	FILE NO. SD0094	APPROV. BY: EA	REV. DATE: MAR '16

Back to page 1

MMWD FURNISHED MATERIAL

1. NEW 5"ø ALUMINUM TUBING VALVE CAP RISER PLACEMENT
2. VALVE CAP
3. EXISTING 5"øALUMINUM TUBING
4. GATE VALVE
5. EXISTING WATER PIPE

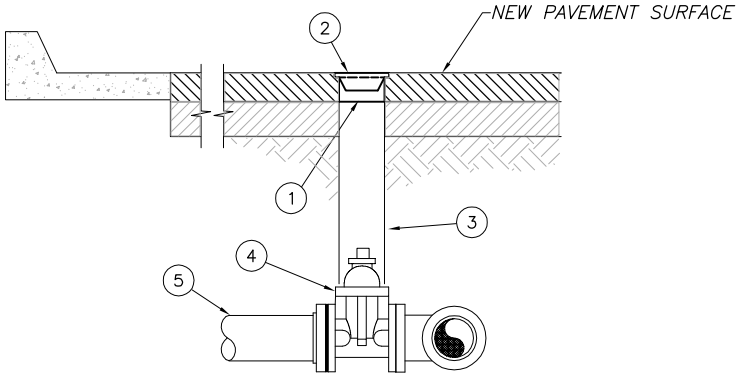

NEW 5"ø ALUMINUM TUBING VALVE CAP RISER

NO SCALE	FILE NO. SD0095	APPROV. BY: EI	REV. DATE: JAN '18

Back to page 1

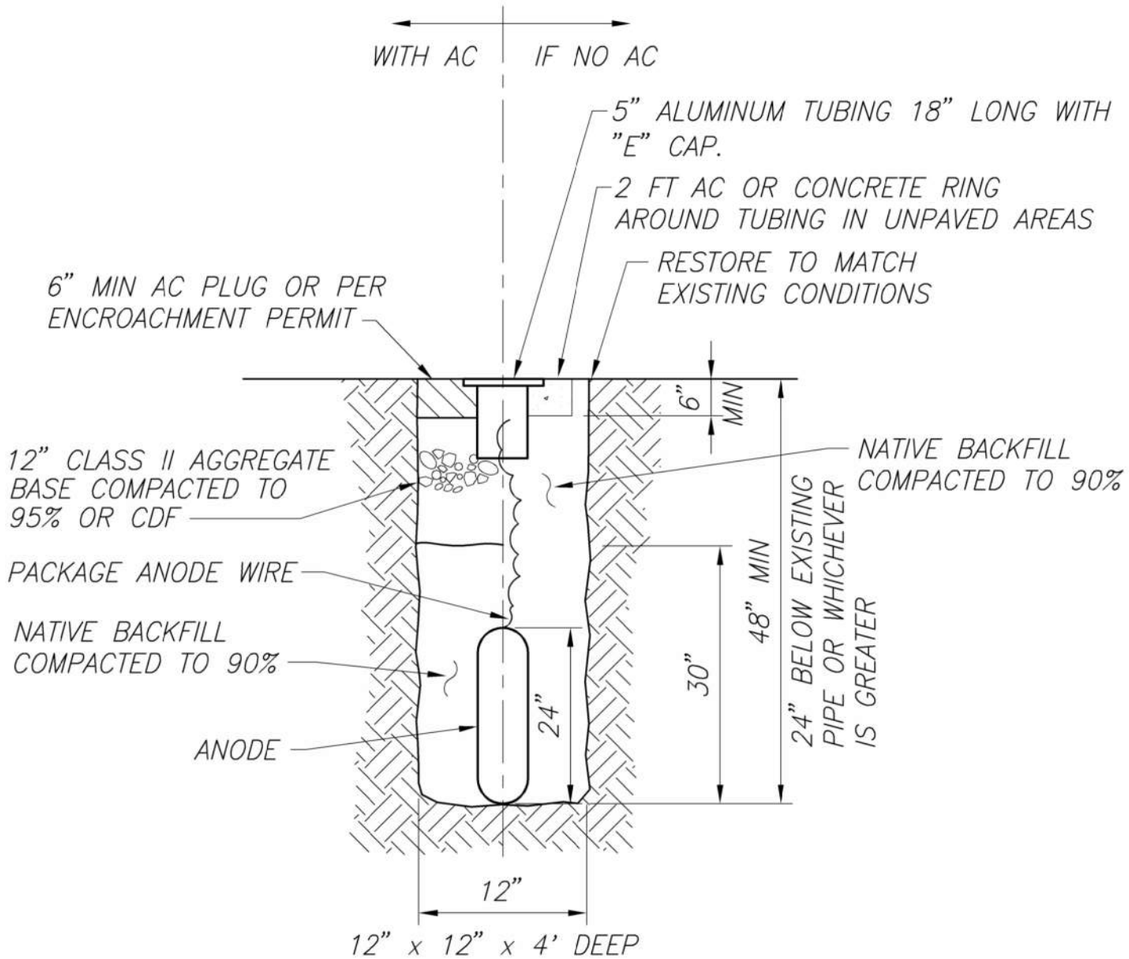

ONE ANODE POTHOLE DETAIL

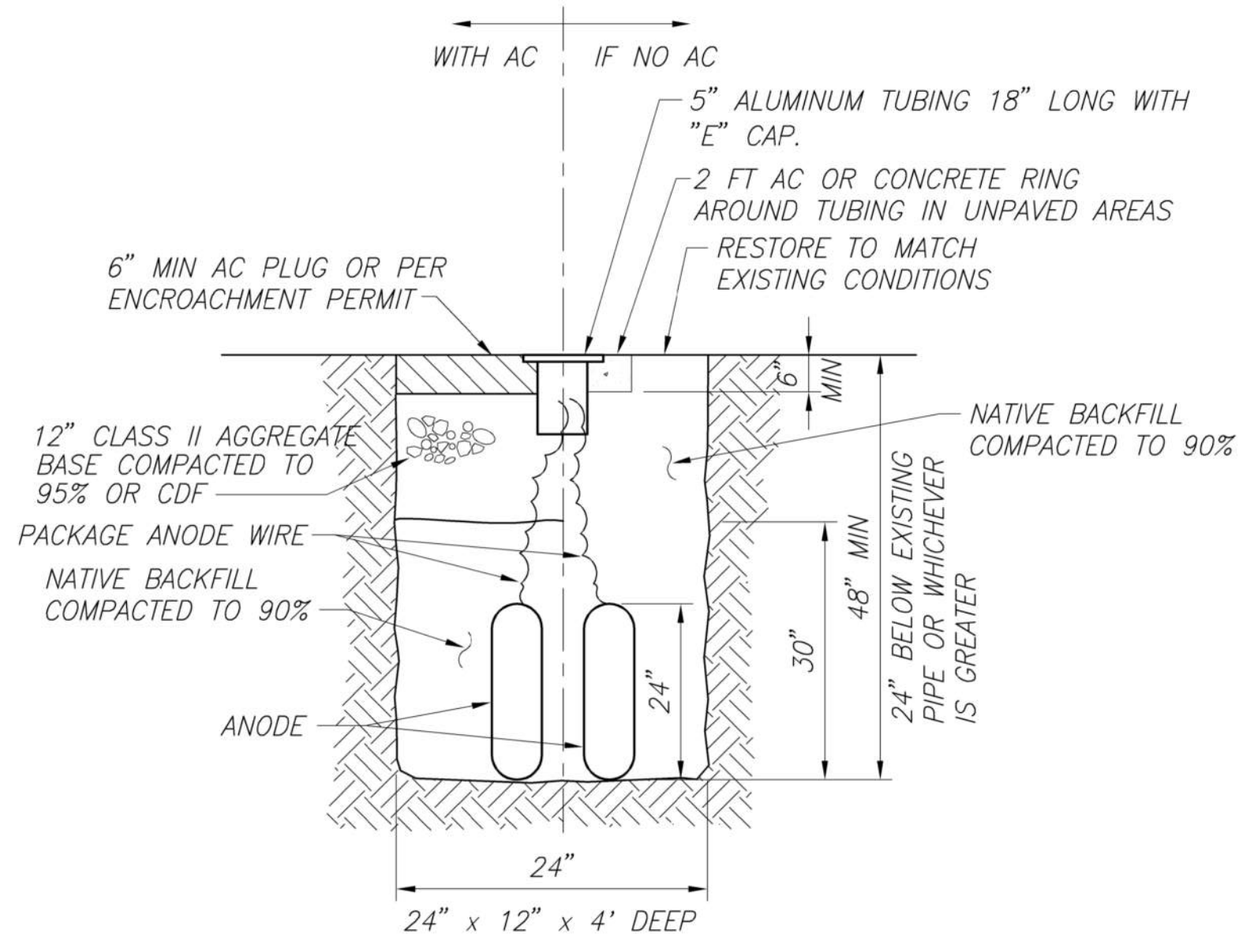

TWO ANODE POTHOLE DETAIL

ANODE POTHOLE DETAILS

NO SCALE	FILE NO. SD0096	APPROV. BY: GA	REV. DATE: MAY '18